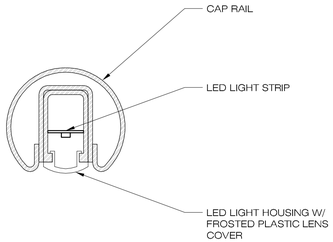


## 2 | HANDRAIL LIGHT DETAIL

SCALE: 1/8"=1'-0"

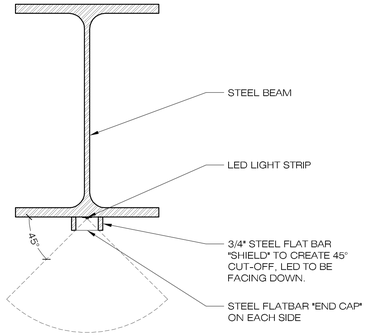


## 3 | LED @ STEEL BEAMS

SCALE: 3"=1'-0"

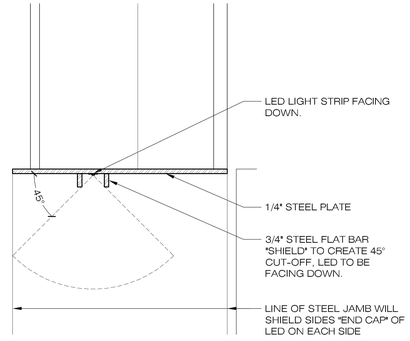


## 3 | LED @ GARAGE DOOR HEAD

SCALE: 3"=1'-0"

## LIGHTING FIXTURE SYMBOLS

| | | LUMENS | QTY. |
|---|---|---|---|
| ● | 2" RECESSED LED CAN: IOLITE OR EQUAL | 750 MAX | (11) |
| | WATERPROOF FLEXIBLE LED STRIP W/ CUSTOM STEEL SHIELDS TO HAVE A 45° CUT OFF<br><br>NOTE: LED TO BE FACING DOWN | 750 MAX<br>750 MAX<br>750 MAX<br>750 MAX | (1) 21 FT<br>(1) 14 FT<br>(3) 9 FT<br>(8) 8 FT |

## GENERAL NOTES

1. ALL BUILDING MOUNTED LIGHT FIXTURES SHALL BE FULLY SHIELDED. RECESSED LIGHTS IN EXTERIOR SOFFITS, EAVES, OR CEILINGS SHALL HAVE A 45° CUTOFF.
2. ALL LIGHTING FIXTURES MUST BE AIMED DIRECTLY DOWNWARDS.
3. ALL LUMINARIES (LIGHT FIXTURES) MUST MEET HILLSIDE REQUIREMENTS:
   - ATTACHED TO BUILDING: 750 LUMENS MAX
   - OTHER USES: 250 LUMENS MAX
   - LANDSCAPE UP-LIGHTING: 150 LUMENS MAX
4. (30) MAXIMUM ALLOWED UP-LIGHTING:
   30,153 / 1,000 = 30.153 (1 FIXTURE PER 1000 SF OF ALLOWABLE DISTURBED AREA)


the construction zone
1729 east osborn road
phoenix, arizona 85016
office 602.230.0383
fax 602.230.0535


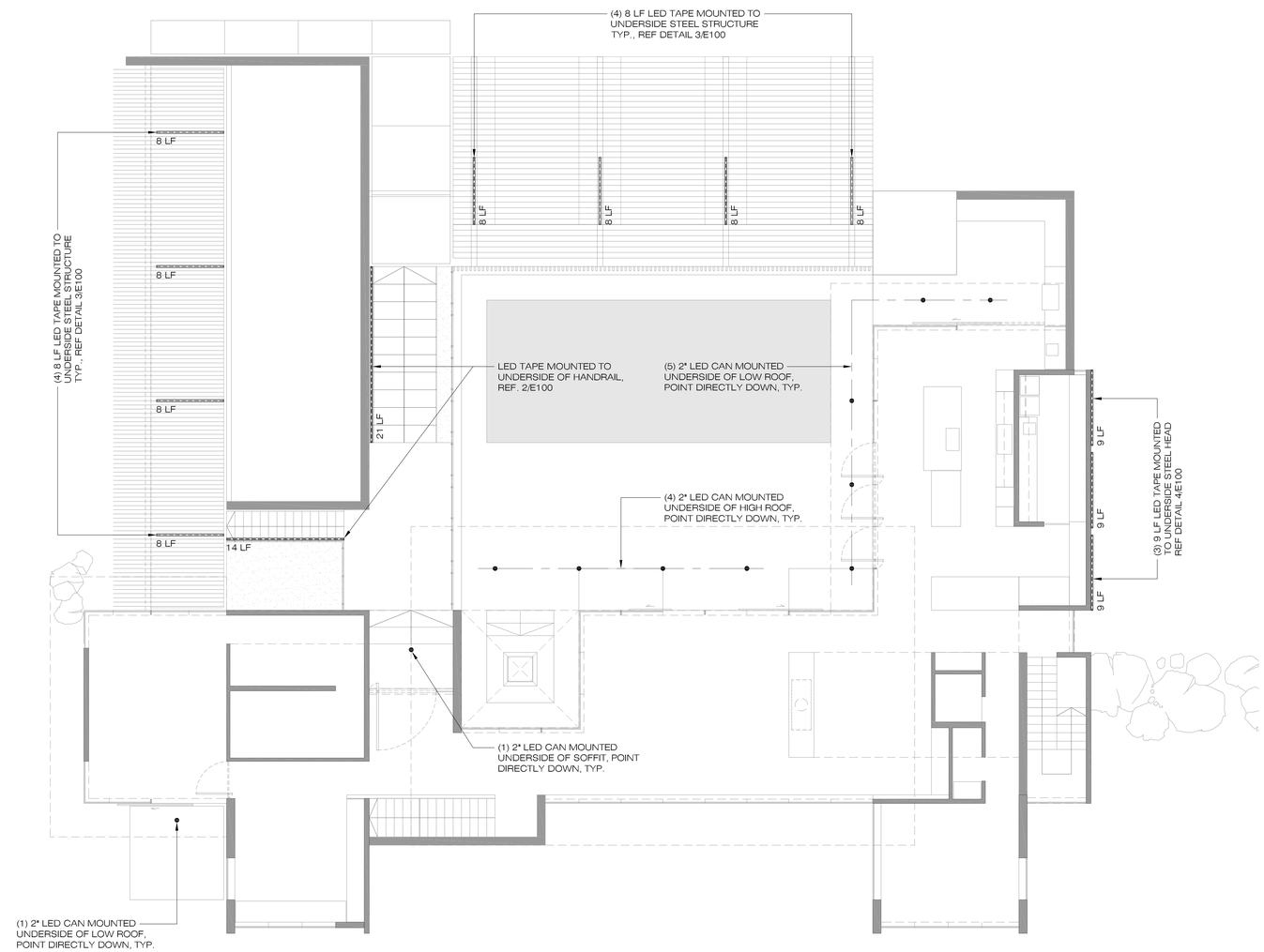


## 1 | EXTERIOR LIGHTING PLAN

SCALE: 1/8"=1'-0"

0' 4' 8' 16'

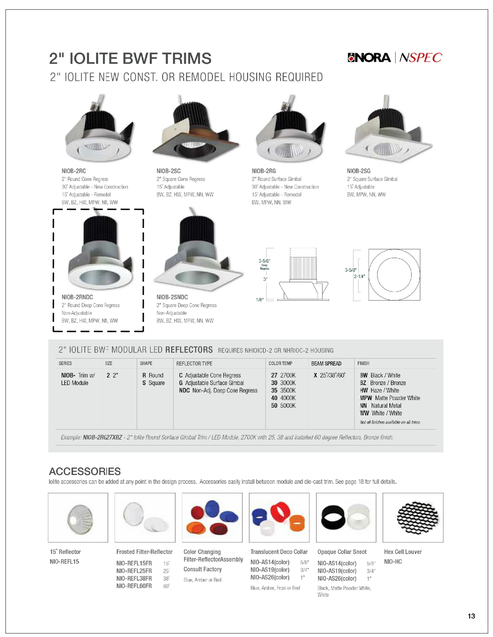


THIS DRAWING IS AN INSTRUMENT OF SERVICE AND PROPERTY OF THE CONSTRUCTION ZONE. THIS DRAWING MAY NOT BE REPRODUCED, OR REPRODUCTIONS HERE OF USED, WITHOUT WRITTEN PERMISSION.

# HILLSIDE
## FORMAL REVIEW

# mclindenresidence

5564 east palo verde lane, paradise valley, arizona 85253

05.01.17

## EXTERIOR LIGHTING PLAN

# E100