PHOTOVOLTAIC ROOF MOUNT SYSTEM

288 MODULES-ROOF MOUNTED - 123.840 kW DC, 99.900 kW AC

4622 E FOOTHILL DR, PARADISE VALLEY, AZ 85253

PHOTOVOLTAIC SYSTEM SPECIFICATIONS:

SYSTEM SIZE:	123.840 kW DC 99.900 kW AC
MODULE TYPE & AMOUNT:	(288) QCELL Q.TRON BLK M-G2+ 430W
MODULE DIMENSIONS:	(L/W/H) 67.8"/44.6"/1.18"
INVERTER:	(09) SOL-ARK 15K-2P-N
BATTERY:	(48) STORZ SP5.12-LFPV4 (240kWh)
BATTERY CABINET:	(05) STORZ POWER CUSTOMIZED BATTERY CABINET (50kWh)
INTERCONNECTION METHOD:	LOAD BREAKER

GENERAL STRUCTURAL NOTES:

a. THE SOLAR PANELS ARE TO BE MOUNTED TO THE ROOF FRAMING USING THE OMNIBASE SYSTEM BY SNAPNRACK WITH E-CURB. THE MOUNTING FEET ARE TO BE SPACED AS SHOWN IN THE DETAILS, AND MUST BE STAGGERED TO ADJACENT FRAMING MEMBERS TO SPREAD OUT THE ADDITIONAL LOAD.

b. UNLESS NOTED OTHERWISE, MOUNTING ANCHORS SHALL BE (6X) #14 WOOD SCREW, S.S., FULLY THREADED, WITH A MINIMUM ½" EMBEDMENT INTO THE ROOF DECK, EXCLUDING THE SCREW TIP.

1. ROOF LIVE LOAD = 20 psf TYPICAL, 0 psf UNDER NEW PV SYSTEM.
2. GROUND SNOW LOAD = 0 psf
3. WIND SPEED = 115 mph
4. EXPOSURE CATEGORY = C

NOTE:
EXISTING PV SYSTEM INSTALLED WILL BE REMOVED.

SHEET INDEX:

PV 0.0:	COVER SHEET
PV 0.1:	PLOT PLAN
PV 1.0:	SITE PLAN
PV 1.1:	ATTACHMENT LAYOUT
PV 1.2:	STRING LAYOUT
PV 1.3:	EQUIPMENT ELEVATION
PV 1.3(A):	BATTERY CABINET ELEVATION
PV 1.4:	STORAGE CONTAINER DETAILS
S 1.0:	MOUNT DETAILS
E 1.1:	3-LINE DIAGRAM
E 1.2:	1-LINE DIAGRAM
E 1.3:	WIRE CALCULATION
E 1.4:	KEY NOTES
E 1.5:	WARNING LABELS
E 1.6:	EQUIPMENT TAG LIST
E 1.7:	ELECTRICAL PHOTOS
E 1.8:	ELECTRICAL PHOTOS
D 1.1+:	EQUIPMENT SPEC SHEET

GOVERNING CODES

ALL WORK SHALL CONFORM TO THE FOLLOWING CODES

a. 2014 NATIONAL ELECTRICAL CODE
b. 2015 INTERNATIONAL RESIDENTIAL CODE
c. 2015 INTERNATIONAL BUILDING CODE
d. 2015 INTERNATIONAL FIRE CODE
e. ANY OTHER LOCAL AMENDMENTS

GENERAL ELECTRIC NOTES:

1. ALL COMPONENTS ARE UL LISTED AND NEC CERTIFIED, WHERE WARRANTED.
2. THE SOLAR PV & ENERGY STORAGE SYSTEM WILL BE INSTALLED IN ACCORDANCE WITH ARTICLE 690 OF THE NEC 2014.
3. THE UTILITY INTERCONNECTION APPLICATION MUST BE APPROVED AND PV & ENERGY STORAGE SYSTEM INSPECTED PRIOR TO PARALLEL OPERATION.
4. ALL CONDUCTORS OF A CIRCUIT, INCLUDING THE EGC, MUST BE INSTALLED IN THE SAME RACEWAY, OR CABLE, OR OTHERWISE RUN WITH THE PV ARRAY CIRCUIT CONDUCTORS WHEN THEY LEAVE THE VICINITY OF THE PV ARRAY.
5. WHERE METALLIC CONDUIT CONTAINING DC CONDUCTORS IS USED INSIDE THE BUILDING, IT SHALL BE IDENTIFIED AS "CAUTION: SOLAR CIRCUIT" EVERY 10FT.
6. HEIGHT OF THE AC DISCONNECT SHALL NOT EXCEED 6'-7" PER NEC CODE 240.24.
7. A GROUNDING ELECTRODE SYSTEM IN ACCORDANCE WITH NEC 690.47 AND 250.50 THROUGH 60 AND 250-166 SHALL BE PROVIDED. PER NEC GROUNDING ELECTRODE SYSTEM OF EXISTING BUILDING MAY BE USED AND BONDED TO THE SERVICE ENTRANCE. IF EXISTING SYSTEM IS INACCESSIBLE OR INADEQUATE A SUPPLEMENTAL GROUNDING ELECTRODE WILL BE USED AT THE INVERTER LOCATION CONSISTING OF A UL LISTED 8 FT. GROUND ROD WITH ACORN CLAMP. GROUNDING ELECTRODE CONDUCTORS SHALL BE NO LESS THAN #8 AWG AND NO LARGER THAN #6 AWG COPPER AND BONDED TO THE EXISTING GROUNDING ELECTRODE TO PROVIDE FOR A COMPLETE SYSTEM.
8. PHOTOVOLTAIC MODULES ARE TO BE CONSIDERED NON-COMBUSTIBLE.
9. PHOTOVOLTAIC INSTALLATION WILL NOT OBSTRUCT ANY PLUMBING. MECHANICAL, OR BUILDING ROOF VENTS.
10. ALL WIRING MUST BE PROPERLY SUPPORTED BY DEVICES OR MECHANICAL MEANS DESIGNED AND LISTED FOR SUCH USE. WIRING MUST BE PERMANENTLY AND COMPLETELY HELD OFF THE ROOF SURFACE.
11. ALL SIGNAGE TO BE PLACED IN ACCORDANCE WITH THE LOCAL BUILDING CODE. IF EXPOSED TO SUNLIGHT, IT SHALL BE UV RESISTANT. ALL PLAQUES AND SIGNAGE WILL BE INSTALLED AS REQUIRED BY THE NEC AND AHJ.
12. AS SPECIFIED BY THE AHJ, EQUIPMENT USED IN UNGROUNDED SYSTEMS LABELED ACCORDING TO NEC 690.35(F).
13. INVERTER(S) USED IN UNGROUNDED SYSTEM SHALL BE LISTED FOR THIS USE [NEC 690.35(G)].
14. THE INSTALLATION OF EQUIPMENT AND ALL ASSOCIATED WIRING AND INTERCONNECTION SHALL BE PERFORMED ONLY BY QUALIFIED PERSONS [NEC 690.4(C)]
15. ALL OUTDOOR EQUIPMENT SHALL BE NEMA 3R RATED (OR BETTER), INCLUDING ALL ROOF MOUNTED TRANSITION BOXES AND SWITCHES.
16. ALL EQUIPMENT SHALL BE PROPERLY GROUNDED AND BONDED IN ACCORDANCE WITH NEC ARTICLE 250.
17. SYSTEM GROUNDING SHALL BE IN ACCORDANCE WITH NEC 690.41.
18. PV & ENERGY STORAGE SYSTEM CIRCUITS INSTALLED ON OR IN BUILDINGS SHALL INCLUDE A RAPID SHUTDOWN FUNCTION IN ACCORDANCE WITH NEC 690.12
19. DISCONNECTING MEANS SHALL BE LOCATED IN A VISIBLE, READILY ACCESSIBLE LOCATION WITHIN THE PV & ENERGY STORAGE SYSTEM EQUIPMENT OR A MAXIMUM OF 10 FEET AWAY FROM THE SYSTEM [NEC 690.13(A)]
20. ALL WIRING METHODS SHALL BE IN ACCORDANCE WITH NEC 690.31
21. WORK CLEARANCES AROUND ELECTRICAL EQUIPMENT WILL BE MAINTAINED PER NEC 110.26(A)(1), 110.26(A)(2) AND 110.26(A)(3).
22. ROOFTOP MOUNTED PHOTOVOLTAIC PANELS AND MODULES SHALL BE TESTED, LISTED & IDENTIFIED IN ACCORDANCE WITH UL1703
23. ELECTRICAL CONTRACTOR TO PROVIDE CONDUIT EXPANSION JOINTS AND ANCHOR CONDUIT RUNS AS REQUIRED PER NEC.

33.55477, -111.97989

1 SATELLITE VIEW
PV 0.0
SCALE: NTS

33.55477, -111.97989

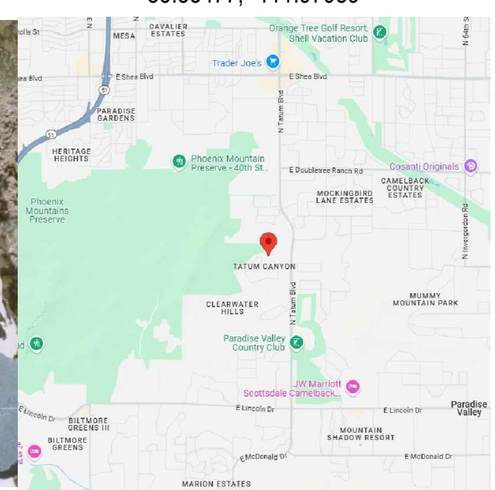

2 VICINITY MAP
PV 0.0
SCALE: NTS

REGISTERED PROFESSIONAL ENGINEER (CIVIL)
CERTIFICATE NO. 69778
VINCENT MWUMVANEZA
Date Signed
ARIZONA, U.S.A.
Exp: 09/30/2025

Signed on: 05/07/2025

OUR WORLD ENERGY
8716 W Ludlow Dr Suite 6,
Peoria, AZ 85381, USA
PHONE: - 623-850-5700

REVISIONS

Description	Date	Rev
CAD	08-Jan-2025	00
CAD	22-Jan-2025	01
CAD	05-Feb-2025	02
CAD	11-Feb-2025	03
CAD	12-Feb-2025	04
CAD	30-Apr-2025	05

Signature with Seal

Project Name & Address

JACKSON RESIDENCE
4622 E FOOTHILL DR, PARADISE VALLEY, AZ 85253
UTILITY ACCOUNT #: 139181000
AHJ: PARADISE VALLEY; UTILITY: APS

Service #
OUR69110

Sheet Name
COVER SHEET

Sheet Size
ANSI B
11" X 17"

Sheet Number
PV 0.0

TOWN
Of
PARADISE VALLEY

6401 E Lincoln Dr
Paradise Valley, AZ 85253
(480) 948-7411

Building Permit

BD10-35859

Issued: 03/05/2010

Expires: 09/01/2010

Address: 4622 E FOOTHILL DR TPV
TATUM CANYON REPLAT OF
54

Parcel: 169-11-140
R-43 HILLSD
SCOTTB

Owner: FOOTHILL DRIVE LLC / JACKSON
4622 E FOOTHILL DR
PARADISE VALLEY, AZ 85253
480-203-1645

Contractor: STANDARD RENEWABLE ENERGY
2125 S 11TH AVE, #140
PHOENIX, AZ 85007
480-422-6344

MAR 8 - 2010

Valuation: $65,690.00

Job Type: 999 Roof Mounted Solar System

Remarks:

Fees:	*Building*	*Hauling*	*Excavation*	*Grading*	*Engr Review*
	$755.75	*$0.00*	*$0.00*	*$0.00*	*$0.00*

Setbacks:	*Front*	*Rear*	*Side*	*Side*	*Height*
	40	*40*	*20*	*20*	*24*
	0	*0*	*0*	*0*	*0*

The Town is released from all liability which may arise from the issuance of this permit. The owner and contractor are responsible for full compliance with the Town of Paradise Valley Town Code, Zoning Ordinance, the most recently-adopted applicable building code and related specialty codes, and any applicable Special Use Permits. Should the Town or authorized agent find work being done contrary to these codes, work shall be stopped immediately upon the issuance of a Stop Work Order.

If this Building Permit is issued to an owner/builder, it is done solely with the condition that construction is for the owner's personal use.

Notices

Pursuant to Town Code §5-1-2, construction for which this permit is issued must commence by scheduling and passing an inspection within one hundred eighty (180) days of the issuance date, and continue by scheduling and passing an inspection every 180 days thereafter. All new utilities shall be installed underground.

This Building Permit is ***non-refundable***, and is issued with the following stipulations:

1. Builder must construct according to the approved plans for which this permit is issued.
2. Builder has verified lot size, and construction is within setbacks required.
3. Construction of fences may not begin until the fees for the permit for the main building are paid and the permit is active.

Owner

Contractor

Printed Name

J. Delaney
Printed Name

03/05/2010

169-11-140
263.36'
N00°19'20"E
54
PATUM CANYON 169-11-140
VARIOUS LOTS REPLAT
MCR 19126
120'
169-11-141
143.33'
N79°27'12"E
347.46'

1750 ft
1800 ft
1800 ft
16872001C
16911130
16911131
16911128
1600 ft
16911127
1700 ft
16911126
1500 ft
1650 ft
1700 ft
16911112
16911140
16911111
1650 ft
16911931
16911141
16911110
1600 ft
1550 ft
1600 ft
16911114
1550 ft
16911065
16911122
16911116
16911066
16911117
16911142
16911067
16911143
16911133

NOTE:
EXISTING PV SYSTEM INSTALLED WILL BE REMOVED.

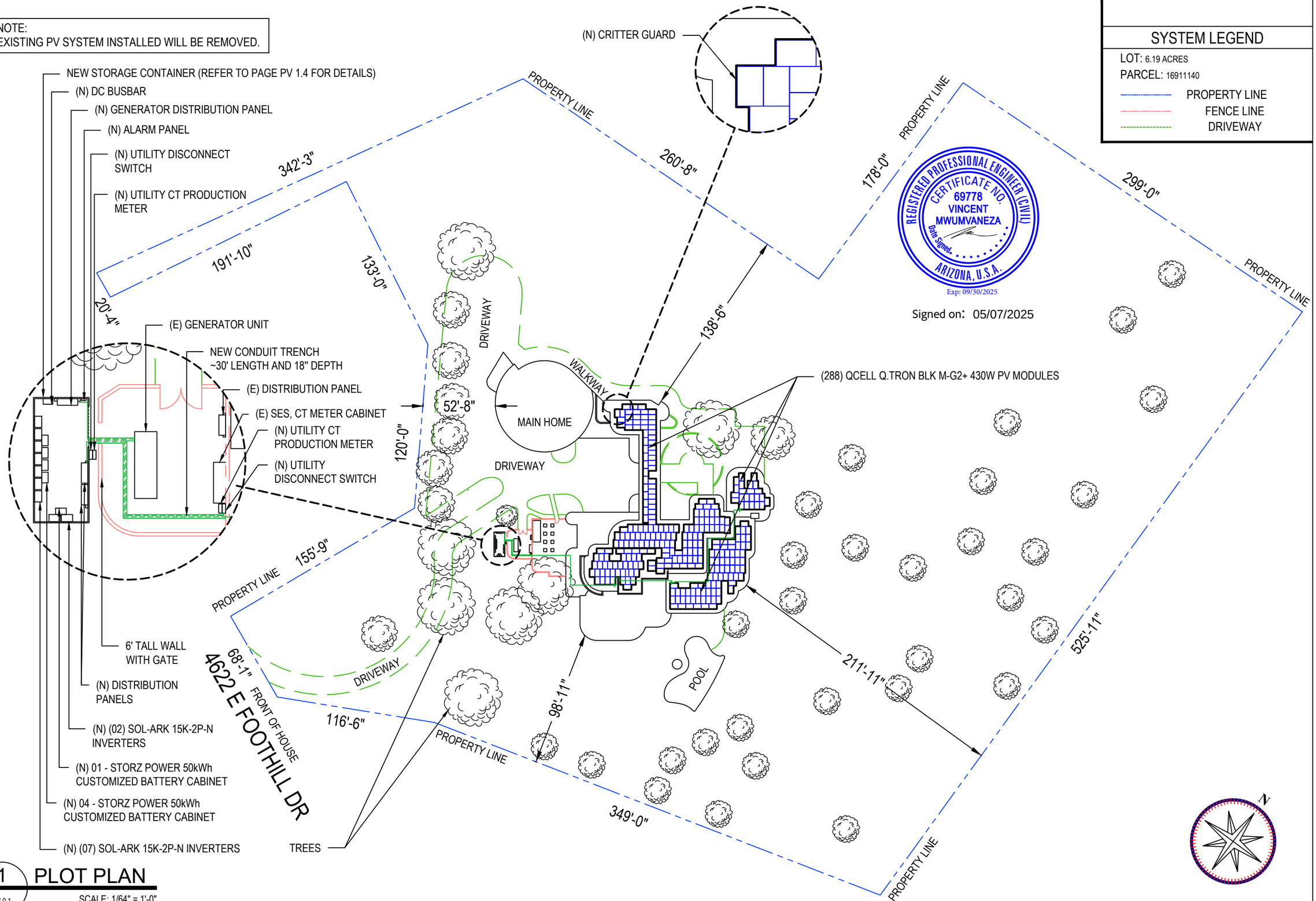

REGISTERED PROFESSIONAL ENGINEER (CIVIL)
CERTIFICATE NO. 69778
VINCENT MWUMVANEZA
Date Signed
ARIZONA, U.S.A.
Exp: 09/30/2025

Signed on: 05/07/2025

SYSTEM LEGEND

LOT: 6.19 ACRES
PARCEL: 16911140

- PROPERTY LINE
- FENCE LINE
- DRIVEWAY

1 PLOT PLAN
PV 0.1
SCALE: 1/64" = 1'-0"

OUR WORLD ENERGY
8716 W Ludlow Dr Suite 6,
Peoria, AZ 85381, USA
PHONE: - 623-850-5700

REVISIONS

Description	Date	Rev
CAD	08-Jan-2025	00
CAD	22-Jan-2025	01
CAD	05-Feb-2025	02
CAD	11-Feb-2025	03
CAD	12-Feb-2025	04
CAD	30-Apr-2025	05

Signature with Seal

Project Name & Address

JACKSON RESIDENCE
4622 E FOOTHILL DR, PARADISE VALLEY, AZ 85253
UTILITY ACCOUNT #: 1391810000
AHJ: PARADISE VALLEY; UTILITY: APS

Service #
OUR69110

Sheet Name
PLOT PLAN

Sheet Size
ANSI B
11" X 17"

Sheet Number
PV 0.1

a.UTILITY HAS 24-HR UNRESTRICTED ACCESS TO ALL PHOTOVOLTAIC SYSTEM COMPONENTS LOCATED AT SERVICE ENTRANCE.
b.WORKSPACE IN FROM OF AN ALTERNATING-CURRENT ELECTRICAL SYSTEM COMPONENT SHALL BE IN ACCORDANCE WITH APS AND NEC REQUIREMENTS. FOR APS REQUIREMENTS REFERENCE SECTION 300 OF THE APS ESRM AND SECTION 8.2 OF THE APS INTERCONNECTION REQUIREMENTS
c.REFERENCE SECTIONS 301.15 OF THE APS ESRM FOR ELECTRICAL METER SEPARATION BETWEEN WATER AND GAS.
d.PHOTOVOLTAIC ENCLOSURES INSTALLED ON SIDE OF DWELLING TO BE PLACE 4'-6' ABOVE GRADE

ROOF ACCESS POINT

ROOF ACCESS POINTS SHALL BE LOCATED IN AREAS THAT DO NOT REQUIRE THE PLACEMENT OF GROUND LADDERS OVER OPENINGS SUCH AS WINDOWS OR DOORS, AND LOCATED AT STRONG POINTS OF BUILDING CONSTRUCTION IN LOCATIONS WHERE THE ACCESS POINT DOES NOT CONFLICT WITH OVERHEAD OBSTRUCTIONS SUCH AS TREE LIMBS, WIRES, OR SIGNS.

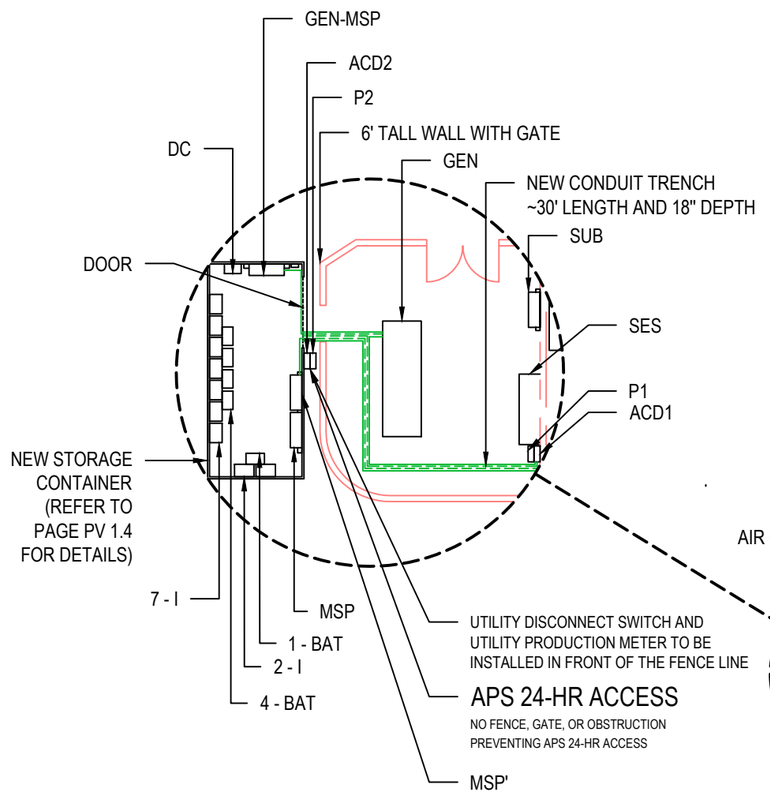

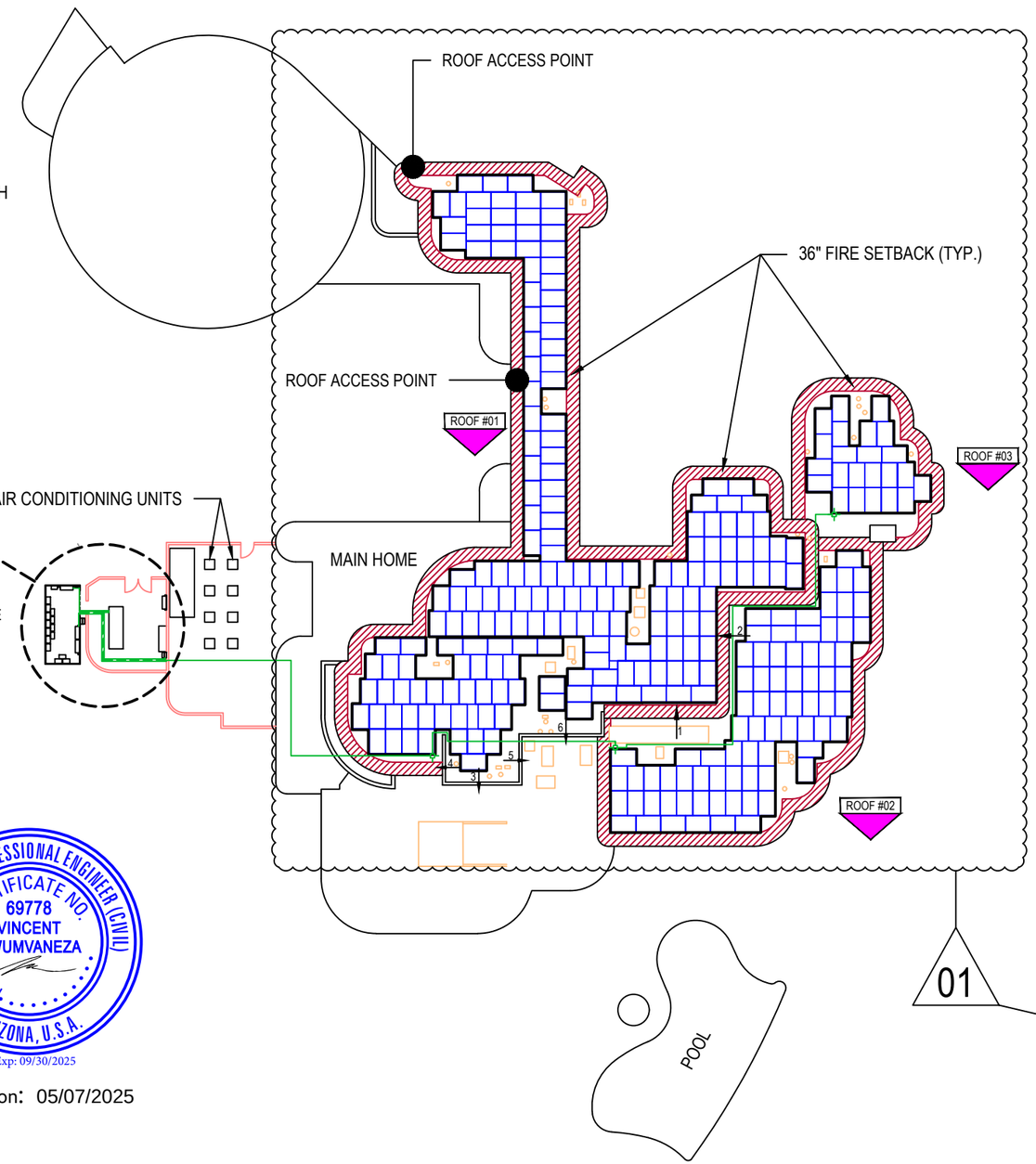

4622 E FOOTHILL DR
FRONT OF HOUSE

REGISTERED PROFESSIONAL ENGINEER (CIVIL)
CERTIFICATE NO. 69778
VINCENT MWUMVANEZA
Date Signed
ARIZONA, U.S.A.
Exp: 09/30/2025

Signed on: 05/07/2025

SYSTEM LEGEND

SES	EXISTING EXTERIOR CT CABINET PANEL - SERVICE ENTRANCE SECTION & POINT OF INTERCONNECTION. TIED TO EXTERIOR UTILITY METER #V90887.
ACD1	NEW UTILITY DISCONNECT SWITCH (1 OF 2)
ACD2	NEW UTILITY DISCONNECT SWITCH (2 OF 2)
P1	NEW BI-DIRECTIONAL PRODUCTION CT-METER (1 OF 2)
P2	NEW BI-DIRECTIONAL PRODUCTION CT-METER (2 OF 2)
MSP	NEW DISTRIBUTION PANEL 1 OF 2
MSP'	NEW DISTRIBUTION PANEL 2 OF 2
GEN-MSP	NEW GENERATOR DISTRIBUTION PANEL
GEN	EXISTING GENERATOR UNIT
SUB	EXISTING DISTRIBUTION PANEL
DC	NEW 2500A DC BUSBAR
BAT	NEW STORZ POWER 50kWh CUSTOMIZED BATTERY CABINET
I	NEW SOL-ARK 15K-2P-N INVERTER

288 NEW QCELL Q.TRON BLK M-G2+ 430W MODULES

FIRE PATHWAY
= ROOF OBSTRUCTIONS
= EXTERIOR RUN
= CONDUIT ROOF TOP JUNCTION BOX

ROOF SECTIONS

ROOF #01
MODULE - 187
SLOPE - 02°
AZIMUTH - 135°
MATERIAL - FOAM
RAFTER SIZE & SPACING - 2"X4" @ 24" O.C.

ROOF #02
MODULE - 78
SLOPE - 02°
AZIMUTH - 135°
MATERIAL - FOAM
RAFTER SIZE & SPACING - 2"X4" @ 24" O.C.

ROOF #03
MODULE - 23
SLOPE - 02°
AZIMUTH - 135°
MATERIAL - FOAM
RAFTER SIZE & SPACING - 2"X4" @ 24" O.C.

ARROW HEAD (INDICATING LOCATION/DIRECTION OF PARAPET WALL)

TOTAL ROOF AREA: 18337ft^2
TOTAL MODULE AREA: 6048ft^2
TOTAL AREA COVERED: 32.98%

OUR WORLD ENERGY
8716 W Ludlow Dr Suite 6,
Peoria, AZ 85381, USA
PHONE: - 623-850-5700

REVISIONS

Description	Date	Rev
CAD	08-Jan-2025	00
CAD	22-Jan-2025	01
CAD	05-Feb-2025	02
CAD	11-Feb-2025	03
CAD	12-Feb-2025	04
CAD	30-Apr-2025	05

Signature with Seal

Project Name & Address

JACKSON RESIDENCE
4622 E FOOTHILL DR, PARADISE VALLEY, AZ 85253
UTILITY ACCOUNT #: 1391810000
AHJ: PARADISE VALLEY; UTILITY: APS

Service #
OUR69110

Sheet Name
SITE PLAN

Sheet Size
ANSI B
11" X 17"

Sheet Number
PV 1.0

1 SITE PLAN
PV 1.0
SCALE: 1/32" = 1'-0"

NOTE:
EXISTING PV SYSTEM INSTALLED WILL BE REMOVED.

NOTE: THE MAXIMUM CANTILEVER OF THE RAIL SHALL BE 1/3 OF THE ATTACHMENT SPACING.

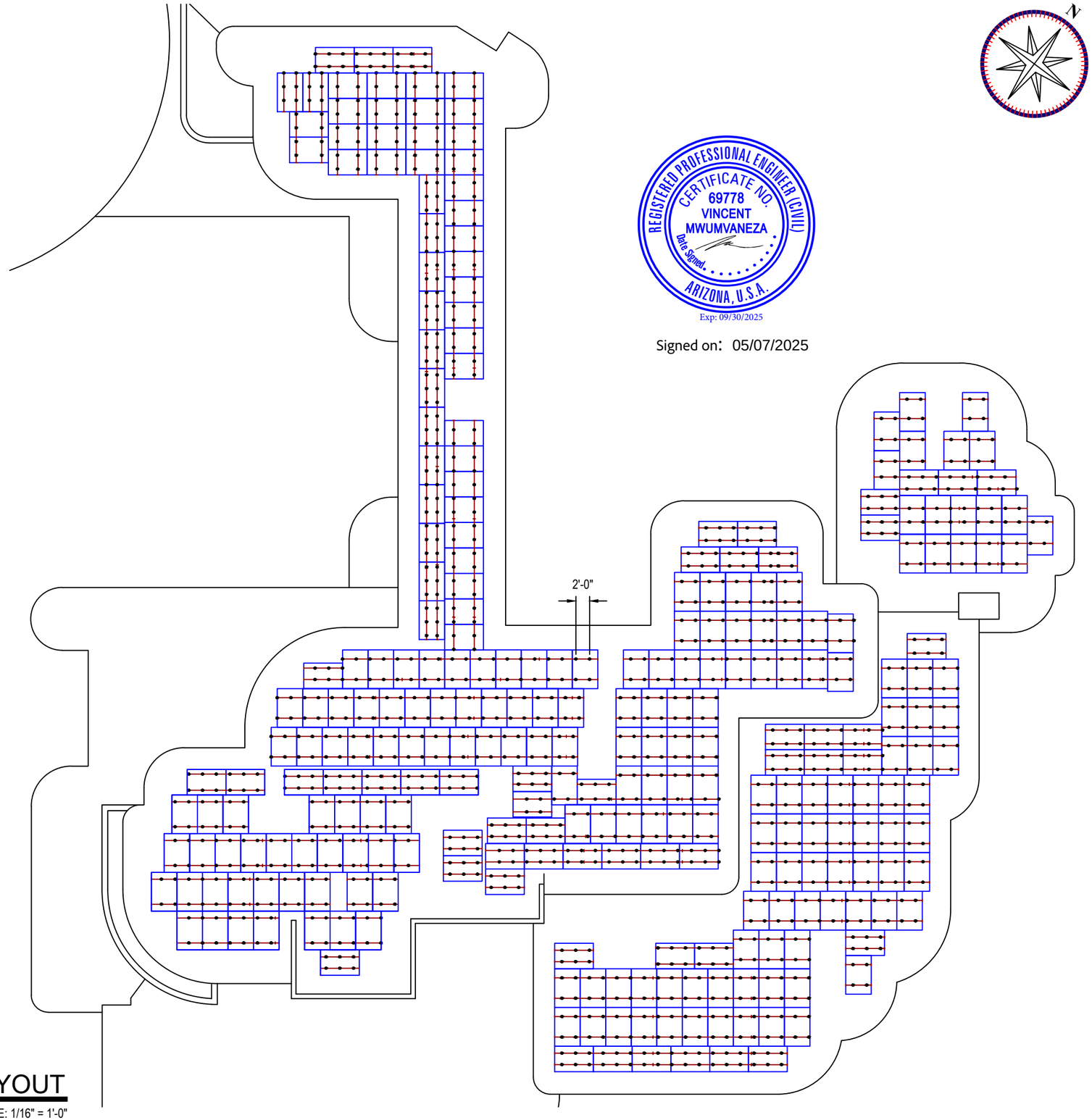

REGISTERED PROFESSIONAL ENGINEER (CIVIL)
CERTIFICATE NO. 69778
VINCENT MWUMVANEZA
Date Signed
ARIZONA, U.S.A.
Exp: 09/30/2025

Signed on: 05/07/2025

SYSTEM LEGEND

● = ATTACHMENT POINTS (1234 Nos)

= RAIL SYSTEM

288 NEW QCELL Q.TRON BLK M-G2+ 430W MODULES

DECK MOUNT

OUR WORLD ENERGY
8716 W Ludlow Dr Suite 6,
Peoria, AZ 85381, USA
PHONE: - 623-850-5700

REVISIONS

Description	Date	Rev
CAD	08-Jan-2025	00
CAD	22-Jan-2025	01
CAD	05-Feb-2025	02
CAD	11-Feb-2025	03
CAD	12-Feb-2025	04
CAD	30-Apr-2025	05

Signature with Seal

Project Name & Address

JACKSON RESIDENCE
4622 E FOOTHILL DR, PARADISE VALLEY, AZ 85253
UTILITY ACCOUNT #: 1391810000
AHJ: PARADISE VALLEY; UTILITY: APS

Service #
OUR69110

Sheet Name
ATTACHMENT & STRING LAYOUT

Sheet Size
ANSI B
11" X 17"

Sheet Number
PV 1.1

1 ATTACHMENT LAYOUT
PV 1.1
SCALE: 1/16" = 1'-0"

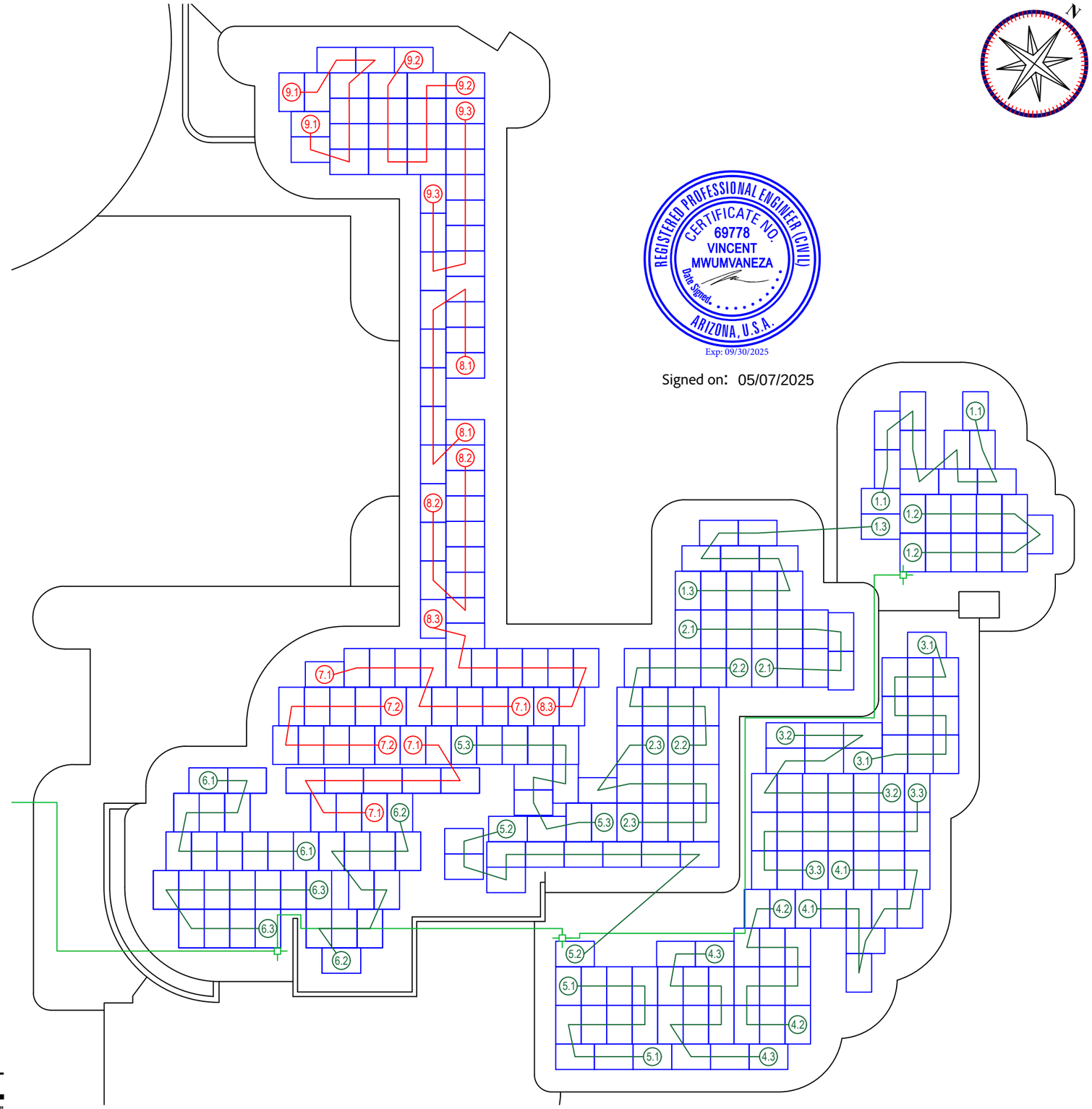

REGISTERED PROFESSIONAL ENGINEER (CIVIL)
CERTIFICATE NO. 69778
VINCENT MWUMVANEZA
Date Signed
ARIZONA, U.S.A.
Exp: 09/30/2025

Signed on: 05/07/2025

SYSTEM LEGEND

= EXTERIOR RUN

= CONDUIT ROOF TOP JUNCTION BOX

288 NEW QCELL Q.TRON BLK M-G2+ 430W MODULES

CIRCUIT(S)

INVERTER #1 TO #6
(X refer to Inverter No.
Y refer to string no for inverter)

X.Y — 11 MODULES

INVERTER #7 TO #9
(X refer to Inverter No.
Y refer to string no for inverter)

X.Y — 10 MODULES

OUR WORLD ENERGY
8716 W Ludlow Dr Suite 6,
Peoria, AZ 85381, USA
PHONE: - 623-850-5700

REVISIONS

Description	Date	Rev
CAD	08-Jan-2025	00
CAD	22-Jan-2025	01
CAD	05-Feb-2025	02
CAD	11-Feb-2025	03
CAD	12-Feb-2025	04
CAD	30-Apr-2025	05

Signature with Seal

Project Name & Address

JACKSON RESIDENCE
4622 E FOOTHILL DR, PARADISE VALLEY, AZ 85253
UTILITY ACCOUNT #: 139181000
AHJ: PARADISE VALLEY; UTILITY: APS

Service #
OUR69110

Sheet Name
ATTACHMENT & STRING LAYOUT

Sheet Size
ANSI B
11" X 17"

Sheet Number
PV 1.2

1 STRING LAYOUT
PV 1.2
SCALE: 1/16" = 1'-0"

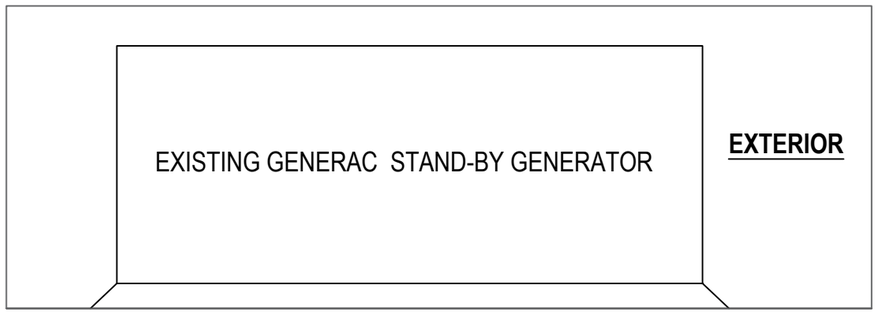

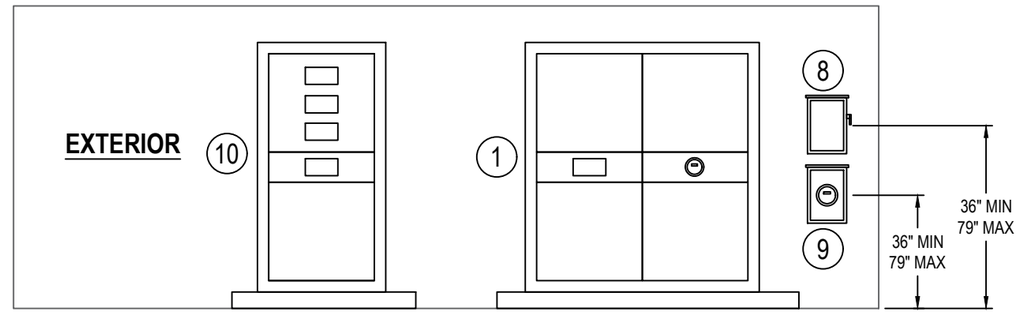

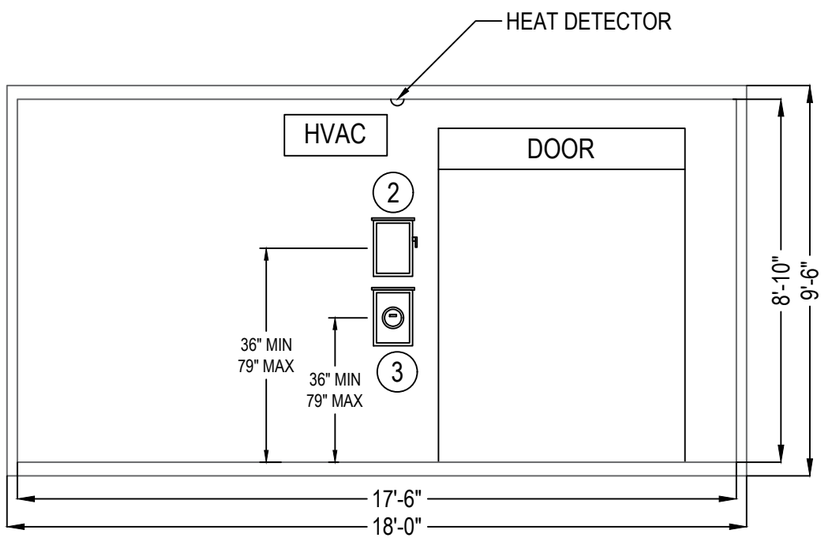

NEW STORAGE CONTAINER - EXTERIOR FRONT SIDE

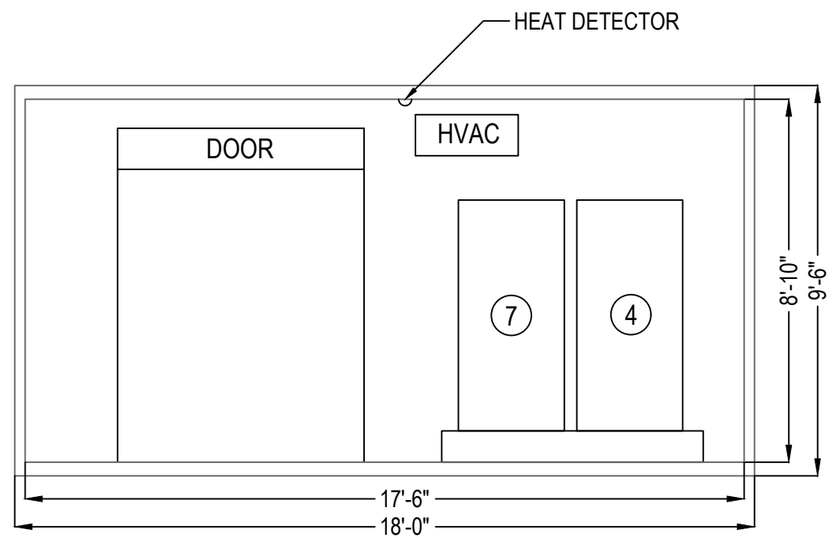

NEW STORAGE CONTAINER - INTERIOR FRONT SIDE

EQUIPMENTS LEGEND	
1	CT CABINET
2	UTILITY DISCONNECT SWITCH (1 OF 2)
3	UTILITY CT PRODUCTION METER (1 OF 2)
4	NEW MAIN DISTRIBUTION PANEL (1 OF 2)
5	SOL-ARK 15K-2P-N INVERTERS (09)
6	STORZ CUSTOM BATTERY CABINET (05)
7	NEW MAIN DISTRIBUTION PANEL (2 OF 2)
8	UTILITY DISCONNECT SWITCH (2 OF 2)
9	UTILITY CT PRODUCTION METER (2 OF 2)
10	EXISTING MAIN DISTRIBUTION PANEL
11	DC BUSBAR
12	GENERATOR DISTRIBUTION PANEL
13	ALARM PANEL

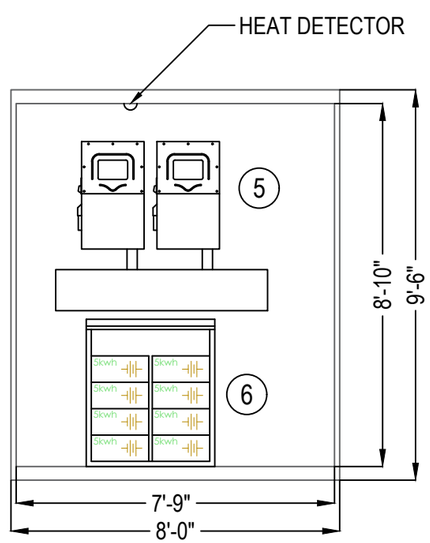

NEW STORAGE CONTAINER - INTERIOR LEFT SIDE

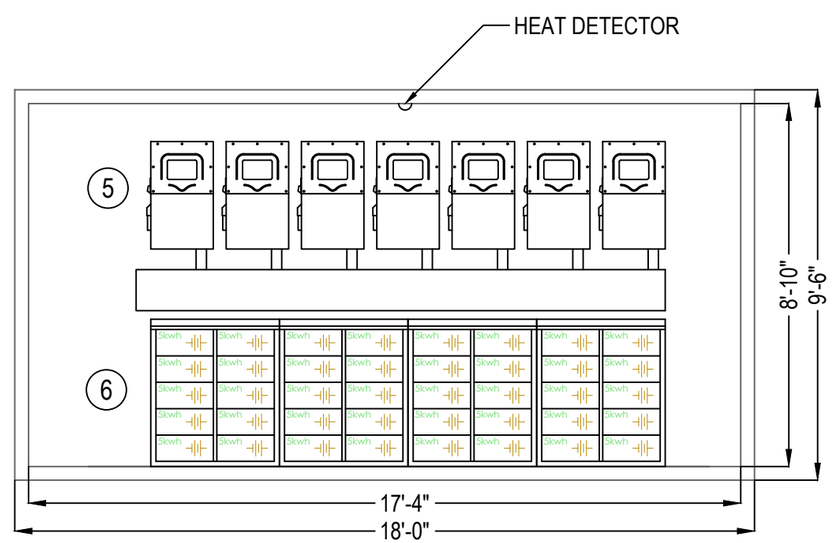

NEW STORAGE CONTAINER - INTERIOR BACK SIDE

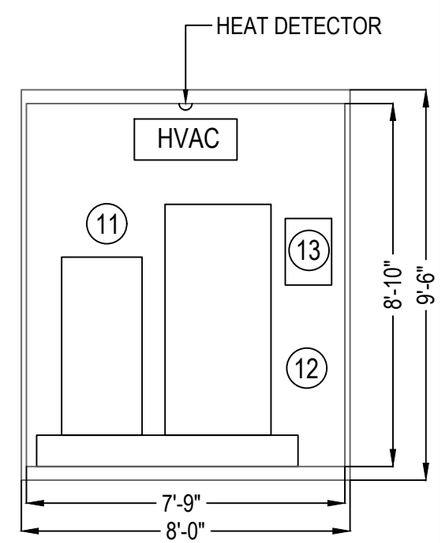

NEW STORAGE CONTAINER - INTERIOR RIGHT SIDE

1 EQUIPMENT ELEVATION

PV 1.3

SCALE: NTS

OUR WORLD ENERGY
8716 W Ludlow Dr Suite 6,
Peoria, AZ 85381, USA,
PHONE: - 623-850-5700

REVISIONS

Description	Date	Rev
CAD	08-Jan-2025	00
CAD	22-Jan-2025	01
CAD	05-Feb-2025	02
CAD	11-Feb-2025	03
CAD	12-Feb-2025	04
CAD	04-Mar-2025	05

CERTIFICATE OF Signature with Seal
Registered Professional Engineer (Electrical)
76473
GREGORY M. DILLETT II
5/7/25
Date Signed
ARIZONA, U.S.A.

Project Name & Address

JACKSON RESIDENCE
4622 E FOOTHILL DR, PARADISE VALLEY, AZ 85253
UTILITY ACCOUNT #: 13918100 00
AHJ: PARADISE VALLEY; UTILITY: APS

Service #
OUR69110

Sheet Name
EQUIPMENT ELEVATION

Sheet Size
ANSI B
11" X 17"

Sheet Number
PV 1.3

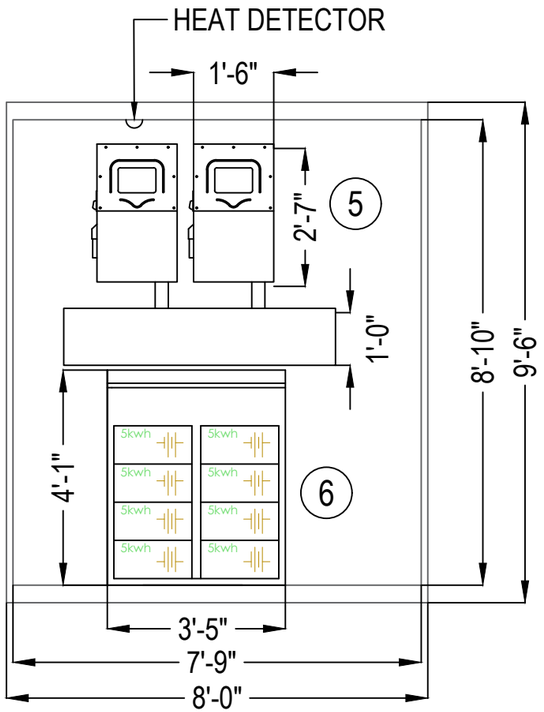

INTERIOR LEFT SIDE FRONT VIEW

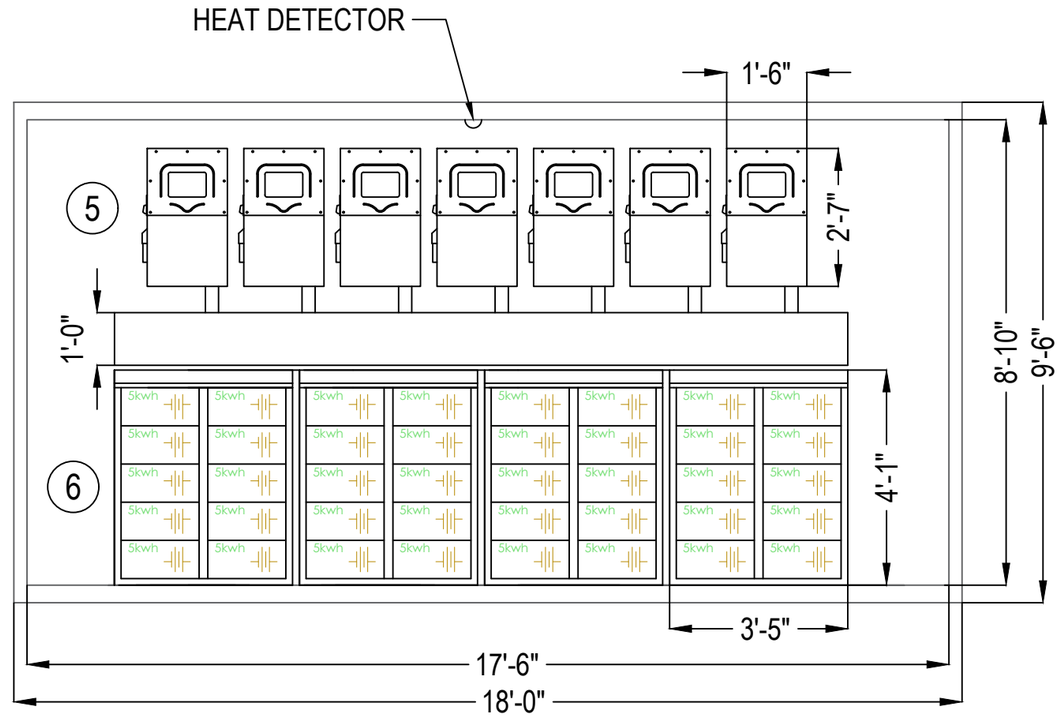

INTERIOR BACK SIDE FRONT VIEW

EQUIPMENTS LEGEND	
1	CT CABINET
2	UTILITY DISCONNECT SWITCH (1 OF 2)
3	UTILITY CT PRODUCTION METER (1 OF 2)
4	NEW MAIN DISTRIBUTION PANEL (1 OF 2)
5	SOL-ARK 15K-2P-N INVERTERS (09)
6	STORZ CUSTOM BATTERY CABINET (05)
7	NEW MAIN DISTRIBUTION PANEL (2 OF 2)
8	UTILITY DISCONNECT SWITCH (2 OF 2)
9	UTILITY CT PRODUCTION METER (2 OF 2)
10	EXISTING MAIN DISTRIBUTION PANEL
11	DC BUSBAR
12	GENERATOR DISTRIBUTION PANEL
13	ALARM PANEL

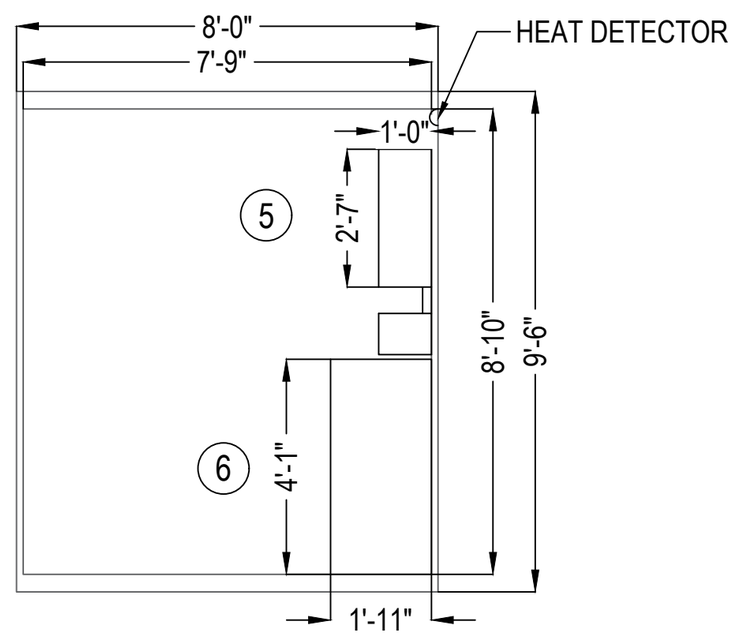

INTERIOR SIDE VIEW

1 BATTERY CABINET ELEVATION
PV 1.3(A)
SCALE: NTS

OUR WORLD ENERGY
OUR WORLD ENERGY
8716 W Ludlow Dr Suite 6,
Peoria, AZ 85381, USA
PHONE: - 623-850-5700

REVISIONS

Description	Date	Rev
CAD	08-Jan-2025	00
CAD	22-Jan-2025	01
CAD	05-Feb-2025	02
CAD	11-Feb-2025	03
CAD	12-Feb-2025	04
CAD	04-Mar-2025	05

Registered Professional Engineer (Electrical)
CERTIFICATE NO.
76473
GREGORY M. DILLETT II
Date Signed 5/7/25
ARIZONA, U.S.A.

Project Name & Address
JACKSON RESIDENCE
4622 E FOOTHILL DR, PARADISE VALLEY, AZ 85253
UTILITY ACCOUNT #: 1391810000
AHJ: PARADISE VALLEY; UTILITY: APS

Service #
OUR69110

Sheet Name
BATTERY CABINET ELEVATION

Sheet Size
ANSI B
11" X 17"

Sheet Number
PV 1.3(A)

LEFT SIDE

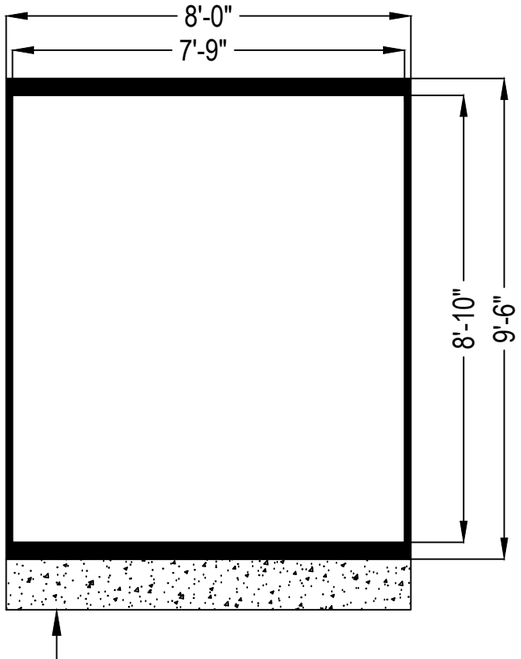

CONCRETE FOUNDATION (18'X8' SLAB)
NOTE: 6" CONCRETE WITH #4 REBARS AT 12"OC IN BOTH DIRECTIONS

FRONT SIDE

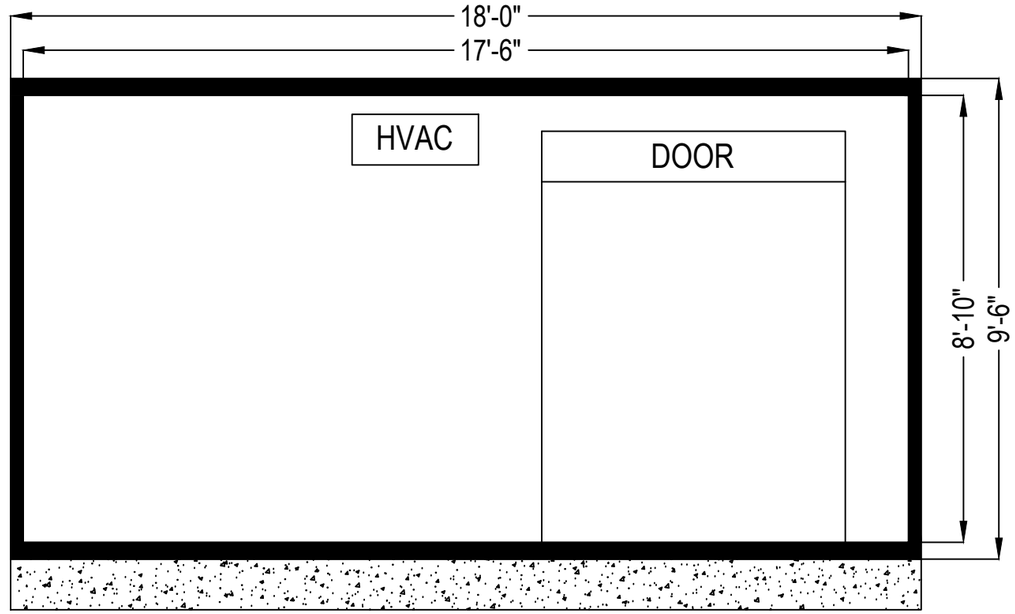

RIGHT SIDE

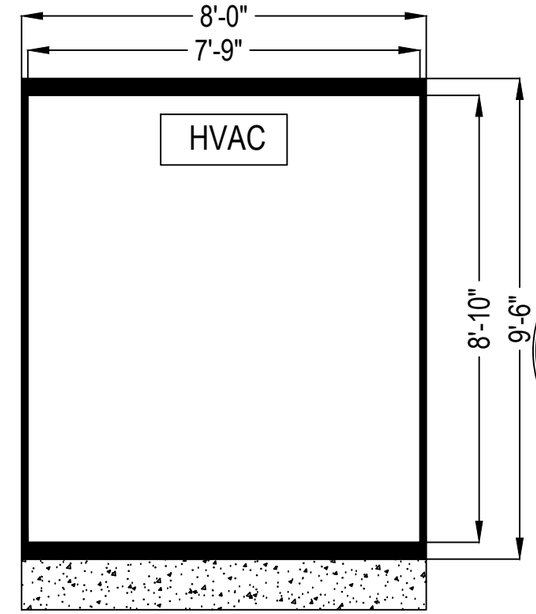

BACK SIDE

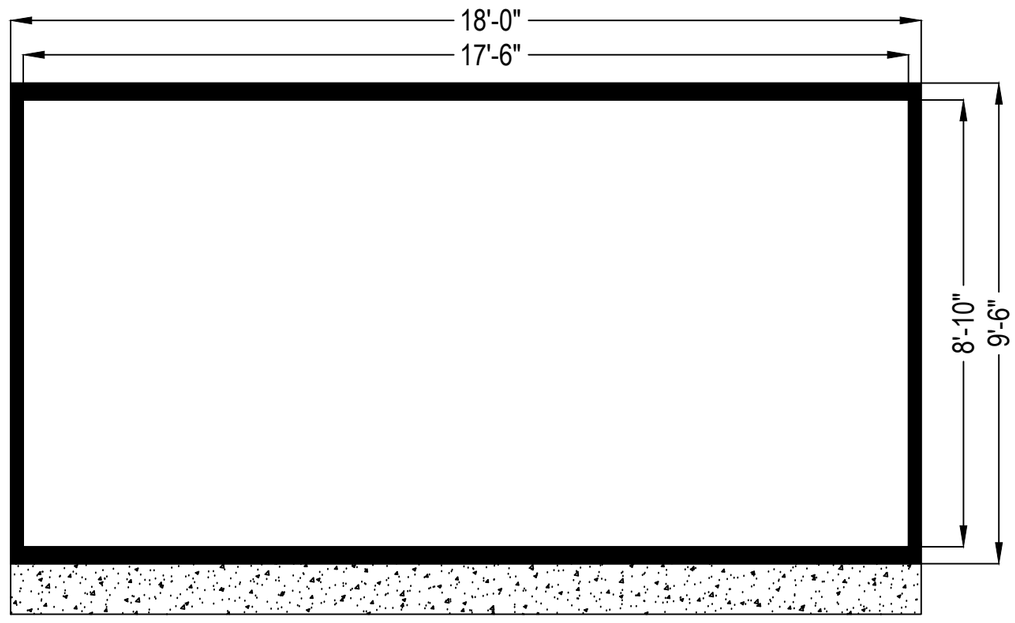

1 STORAGE CONTAINER DETAILS
PV 1.4
SCALE: NTS

OUR WORLD ENERGY
OUR WORLD ENERGY
8716 W Ludlow Dr Suite 6,
Peoria, AZ 85381, USA
PHONE: - 623-850-5700

REVISIONS

Description	Date	Rev
CAD	08-Jan-2025	00
CAD	22-Jan-2025	01
CAD	05-Feb-2025	02
CAD	11-Feb-2025	03
CAD	14-Feb-2025	04

CERTIFICATE OF Registered Professional Engineer (Electrical)
Signature with Seal
76473
GREGORY M. DILLETT II
5/7/25
Date Signed
ARIZONA, U.S.A.

Project Name & Address

JACKSON RESIDENCE
4622 E FOOTHILL DR, PARADISE VALLEY, AZ 85253
UTILITY ACCOUNT #: 1391810000
AHJ: PARADISE VALLEY; UTILITY: APS

Service #
OUR69110

Sheet Name
STORAGE CONTAINER

Sheet Size
ANSI B
11" X 17"

Sheet Number
PV 1.4

ATTACHMENT IS TO BE DECK MOUNTED AND WON'T BE ATTACHED TO THE RAFTER.

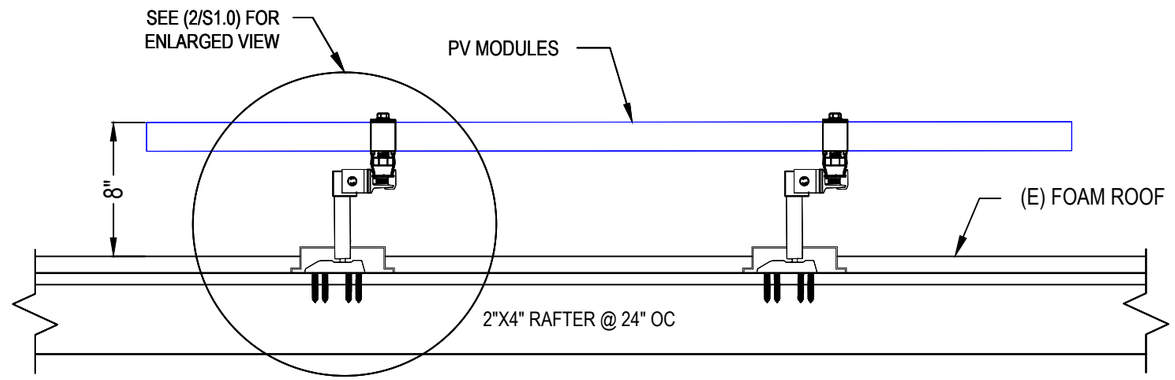

1 SNAPNRACK OMNIBASE ATTACHMENT DETAIL

S 1.0 SCALE: NTS

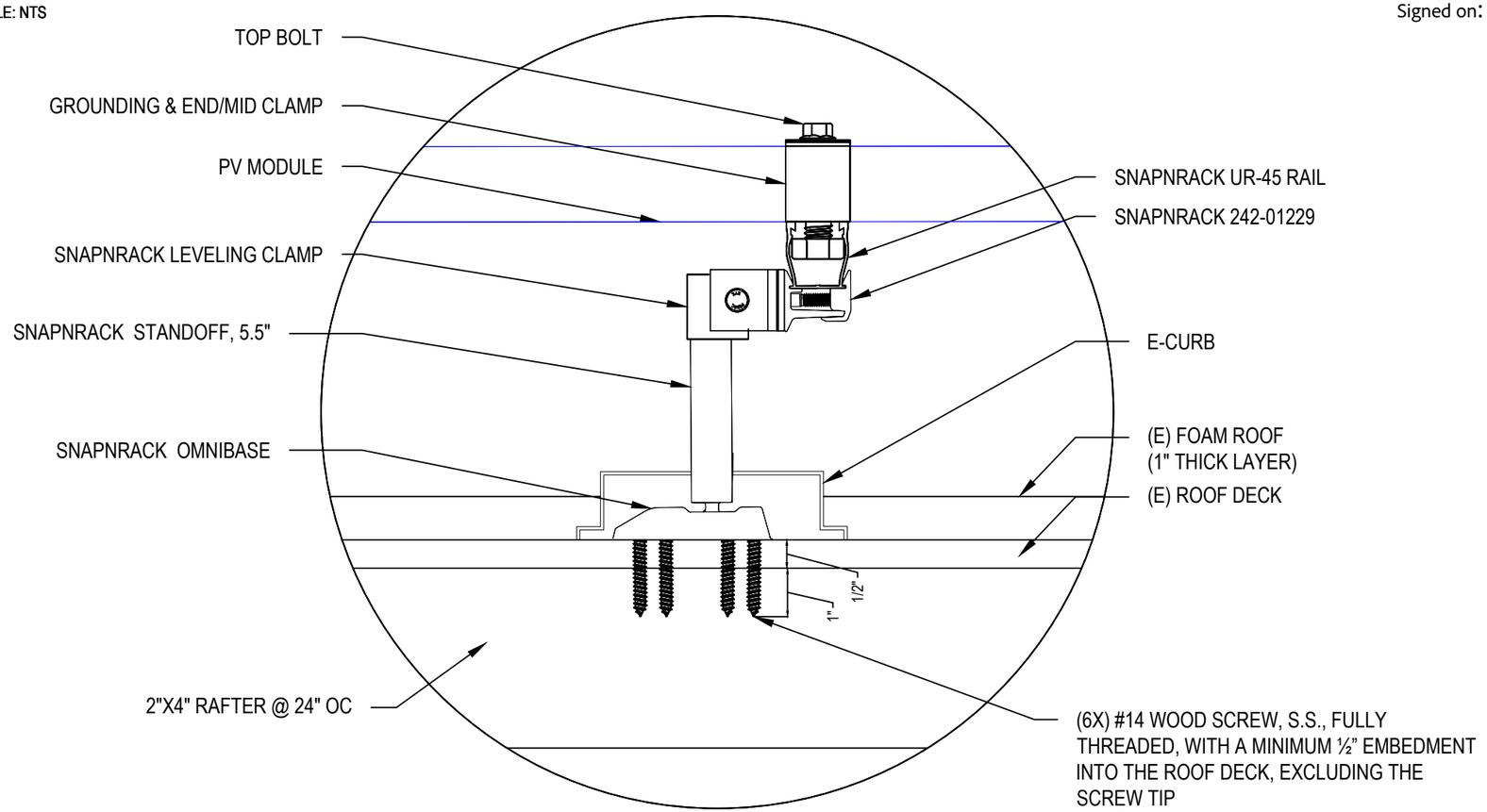

2 ATTACHMENT DETAIL (enlarged view)

S 1.0 SCALE: NTS

REGISTERED PROFESSIONAL ENGINEER (CIVIL)
CERTIFICATE NO. 69778
VINCENT MWUMVANEZA
Date Signed
ARIZONA, U.S.A.
Exp: 09/30/2025

Signed on: 05/07/2025

OUR WORLD ENERGY
OUR WORLD ENERGY
8716 W Ludlow Dr Suite 6,
Peoria, AZ 85381, USA
PHONE: - 623-850-5700

REVISIONS

Description	Date	Rev
CAD	08-Jan-2025	00
CAD	22-Jan-2025	01
CAD	05-Feb-2025	02
CAD	11-Feb-2025	03
CAD	12-Feb-2025	04
CAD	30-Apr-2025	05

Signature with Seal

Project Name & Address

JACKSON RESIDENCE
4622 E FOOTHILL DR, PARADISE VALLEY, AZ 85253
UTILITY ACCOUNT #: 1391810000
AHJ: PARADISE VALLEY; UTILITY: APS

Service #
OUR69110

Sheet Name
MOUNT DETAIL

Sheet Size
ANSI B
11" X 17"

Sheet Number
S 1.0

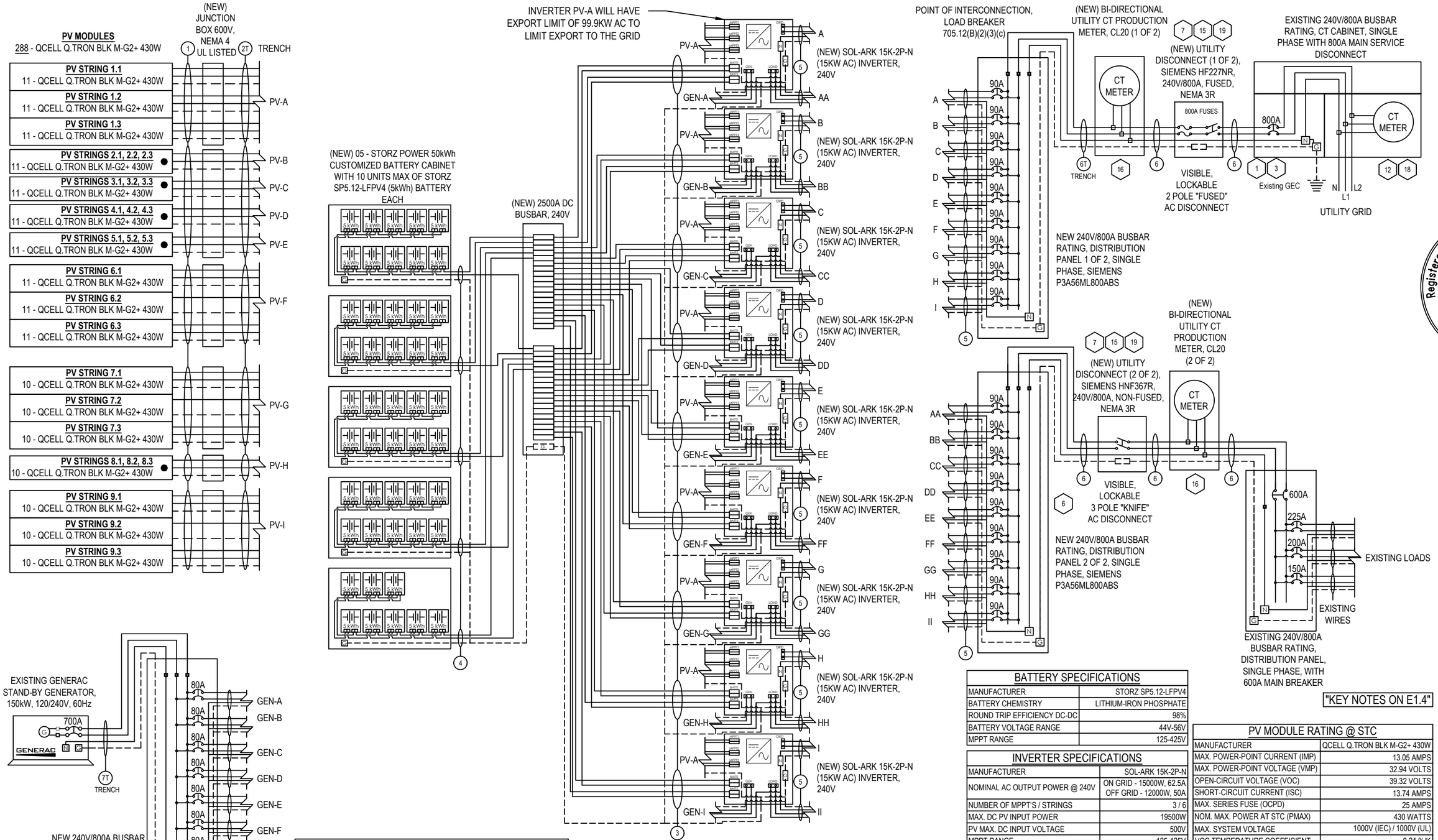

"KEY NOTES ON E1.4"

BATTERY SPECIFICATIONS	
MANUFACTURER	STORZ SP5.12-LFPV4
BATTERY CHEMISTRY	LITHIUM-IRON PHOSPHATE
ROUND TRIP EFFICIENCY DC-DC	98%
BATTERY VOLTAGE RANGE	44V-56V
MPPT RANGE	125-425V

INVERTER SPECIFICATIONS	
MANUFACTURER	SOL-ARK 15K-2P-N
NOMINAL AC OUTPUT POWER @ 240V	ON GRID - 15000W, 62.5A OFF GRID - 12000W, 50A
NUMBER OF MPPT'S / STRINGS	3 / 6
MAX. DC PV INPUT POWER	19500W
PV MAX. DC INPUT VOLTAGE	500V
MPPT RANGE	125-425V

PV MODULE RATING @ STC	
MANUFACTURER	QCELL Q.TRON BLK M-G2+ 430W
MAX. POWER-POINT CURRENT (IMP)	13.05 AMPS
MAX. POWER-POINT VOLTAGE (VMP)	32.94 VOLTS
OPEN-CIRCUIT VOLTAGE (VOC)	39.32 VOLTS
SHORT-CIRCUIT CURRENT (ISC)	13.74 AMPS
MAX. SERIES FUSE (OCPD)	25 AMPS
NOM. MAX. POWER AT STC (PMAX)	430 WATTS
MAX. SYSTEM VOLTAGE	1000V (IEC) / 1000V (UL)
VOC TEMPERATURE COEFFICIENT	-0.24 %/K

Photovoltaic System	
DC System Size (Watts)	123840
AC System Size (Watts)	99900
Total Module Count	288

1	+	(1)	10 AWG PV WIRE	CU	RED
	-	(1)	10 AWG PV WIRE	CU	BLACK
	G	(1)	10 AWG BARE COPPER	CU	BARE
	FREE AIR		PV WIRE RUN		EXTERIOR

2T	+	(3)	10 AWG THHN/THWN-2	CU	RED
	-	(3)	10 AWG THHN/THWN-2	CU	BLACK
	G	(1)	10 AWG THHN/THWN-2	CU	GREEN
	CONDUIT		3" SCH40 PVC		EXTERIOR

3	+	(1)	1/0 AWG THHN/THWN-2	CU	RED
	-	(1)	1/0 AWG THHN/THWN-2	CU	BLACK
	G	(1)	6 AWG THHN/THWN-2	CU	GREEN
	CONDUIT		4" SCH40 PVC		EXTERIOR

4	+	(2)	3/0 AWG THHN/THWN-2	CU	RED
	-	(2)	3/0 AWG THHN/THWN-2	CU	BLACK
	G	(1)	6 AWG THHN/THWN-2	CU	GREEN
	CONDUIT		4" SCH40 PVC		EXTERIOR

5	L1	(1)	3 AWG THHN/THWN-2	CU	BLACK
	L2	(1)	3 AWG THHN/THWN-2	CU	RED
	N	(1)	3 AWG THHN/THWN-2	CU	WHITE
	G	(1)	6 AWG THHN/THWN-2	CU	GREEN
	CONDUIT		4" SCH40 PVC		EXTERIOR

6,6T	L1	(2)	600 KCMIL THHN/THWN-2	CU	BLACK
	L2	(2)	600 KCMIL THHN/THWN-2	CU	RED
	N	(2)	600 KCMIL THHN/THWN-2	CU	WHITE
	G	(1)	1/0 AWG THHN/THWN-2	CU	GREEN
	CONDUIT		4" SCH 40 PVC		EXTERIOR

7T	L1	(1)	3 AWG THHN/THWN-2	CU	BLACK
	L2	(1)	3 AWG THHN/THWN-2	CU	RED
	N	(1)	3 AWG THHN/THWN-2	CU	WHITE
	G	(1)	6 AWG THHN/THWN-2	CU	GREEN
	CONDUIT		1" SCH 40 PVC		EXTERIOR

OUR WORLD ENERGY
OUR WORLD ENERGY
8716 W Ludlow Dr Suite 6,
Peoria, AZ 85381, USA
PHONE: - 623-850-5700

REVISIONS

Description	Date	Rev
CAD	08-Jan-2025	00
CAD	22-Jan-2025	01
CAD	05-Feb-2025	02
CAD	11-Feb-2025	03
CAD	14-Feb-2025	04
CAD	04-Mar-2025	05

Registered Professional Engineer (Electrical)
CERTIFICATE NO.
Signature with Seal
76473
GREGORY M. DILLETT II
5/7/25
Date Signed
ARIZONA, U.S.A.

Project Name & Address

JACKSON RESIDENCE
4622 E FOOTHILL DR, PARADISE VALLEY, AZ 85253
UTILITY ACCOUNT #: 1391810000
AHJ: PARADISE VALLEY; UTILITY: APS

Service #
OUR69110

Sheet Name
3-LINE DIAGRAM

Sheet Size
ANSI B
11" X 17"

Sheet Number
E 1.1

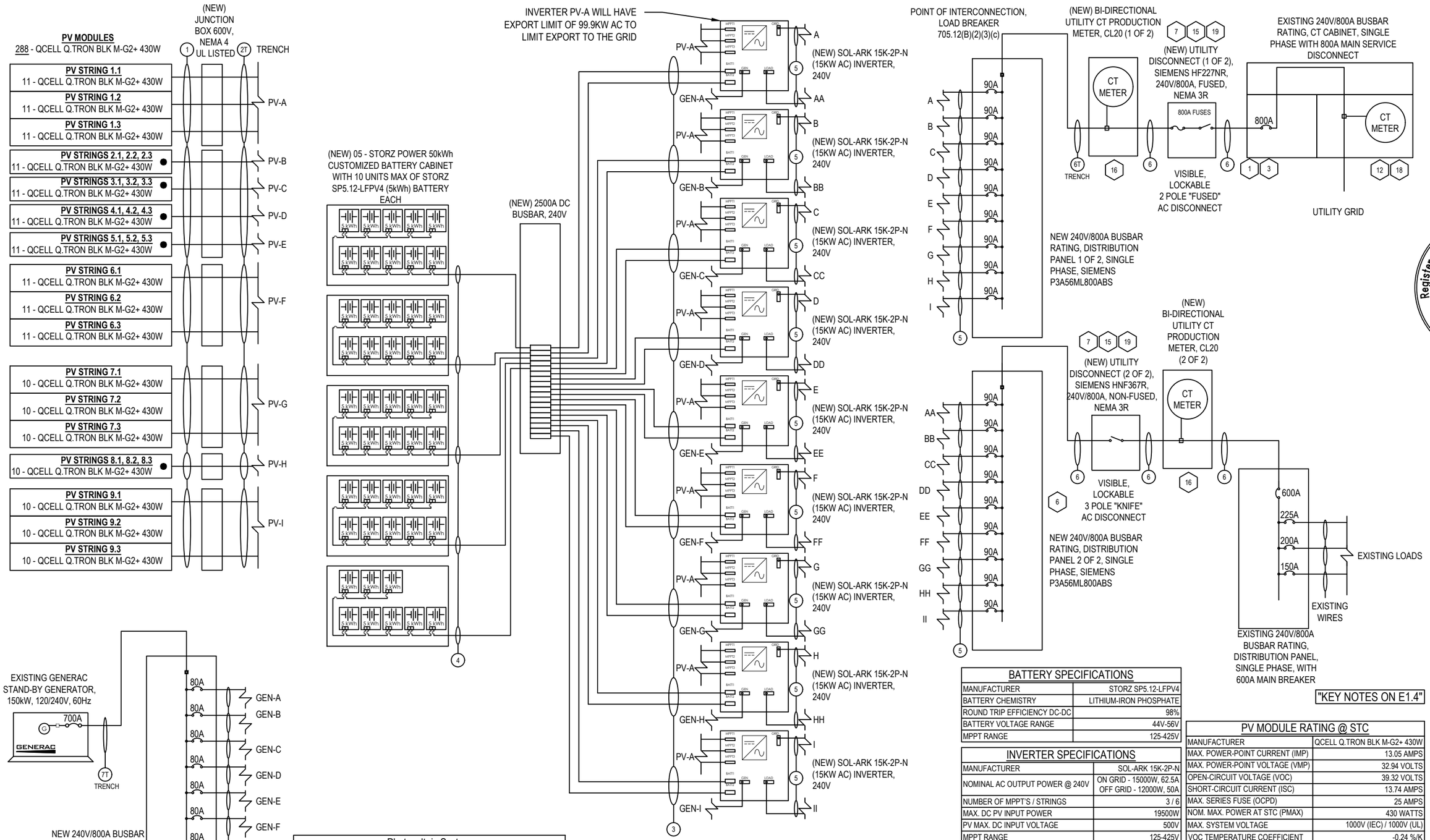

Photovoltaic System	
DC System Size (Watts)	123840
AC System Size (Watts)	99900
Total Module Count	288

BATTERY SPECIFICATIONS	
MANUFACTURER	STORZ SP5.12-LFPV4
BATTERY CHEMISTRY	LITHIUM-IRON PHOSPHATE
ROUND TRIP EFFICIENCY DC-DC	98%
BATTERY VOLTAGE RANGE	44V-56V
MPPT RANGE	125-425V

INVERTER SPECIFICATIONS	
MANUFACTURER	SOL-ARK 15K-2P-N
NOMINAL AC OUTPUT POWER @ 240V	ON GRID - 15000W, 62.5A OFF GRID - 12000W, 50A
NUMBER OF MPPT'S / STRINGS	3 / 6
MAX. DC PV INPUT POWER	19500W
PV MAX. DC INPUT VOLTAGE	500V
MPPT RANGE	125-425V

PV MODULE RATING @ STC	
MANUFACTURER	QCELL Q.TRON BLK M-G2+ 430W
MAX. POWER-POINT CURRENT (IMP)	13.05 AMPS
MAX. POWER-POINT VOLTAGE (VMP)	32.94 VOLTS
OPEN-CIRCUIT VOLTAGE (VOC)	39.32 VOLTS
SHORT-CIRCUIT CURRENT (ISC)	13.74 AMPS
MAX. SERIES FUSE (OCPD)	25 AMPS
NOM. MAX. POWER AT STC (PMAX)	430 WATTS
MAX. SYSTEM VOLTAGE	1000V (IEC) / 1000V (UL)
VOC TEMPERATURE COEFFICIENT	-0.24 %/K

1	+	(1)	10 AWG PV WIRE	CU	RED
	-	(1)	10 AWG PV WIRE	CU	BLACK
	G	(1)	10 AWG BARE COPPER	CU	BARE
	FREE AIR		PV WIRE RUN		EXTERIOR

2T	+	(3)	10 AWG THHN/THWN-2	CU	RED
	-	(3)	10 AWG THHN/THWN-2	CU	BLACK
	G	(1)	10 AWG THHN/THWN-2	CU	GREEN
	CONDUIT		3" SCH40 PVC		EXTERIOR

3	+	(1)	1/0 AWG THHN/THWN-2	CU	RED
	-	(1)	1/0 AWG THHN/THWN-2	CU	BLACK
	G	(1)	6 AWG THHN/THWN-2	CU	GREEN
	CONDUIT		4" SCH40 PVC		EXTERIOR

4	+	(2)	3/0 AWG THHN/THWN-2	CU	RED
	-	(2)	3/0 AWG THHN/THWN-2	CU	BLACK
	G	(1)	6 AWG THHN/THWN-2	CU	GREEN
	CONDUIT		4" SCH40 PVC		EXTERIOR

5	L1	(1)	3 AWG THHN/THWN-2	CU	BLACK
	L2	(1)	3 AWG THHN/THWN-2	CU	RED
	N	(1)	3 AWG THHN/THWN-2	CU	WHITE
	G	(1)	6 AWG THHN/THWN-2	CU	GREEN
	CONDUIT		4" SCH40 PVC		EXTERIOR

6,6T	L1	(2)	600 KCMIL THHN/THWN-2	CU	BLACK
	L2	(2)	600 KCMIL THHN/THWN-2	CU	RED
	N	(2)	600 KCMIL THHN/THWN-2	CU	WHITE
	G	(1)	1/0 AWG THHN/THWN-2	CU	GREEN
	CONDUIT		4" SCH 40 PVC		EXTERIOR

7T	L1	(1)	3 AWG THHN/THWN-2	CU	BLACK
	L2	(1)	3 AWG THHN/THWN-2	CU	RED
	N	(1)	3 AWG THHN/THWN-2	CU	WHITE
	G	(1)	6 AWG THHN/THWN-2	CU	GREEN
	CONDUIT		1" SCH 40 PVC		EXTERIOR

OUR WORLD ENERGY
8716 W Ludlow Dr Suite 6,
Peoria, AZ 85381, USA
PHONE: - 623-850-5700

REVISIONS

Description	Date	Rev
CAD	08-Jan-2025	00
CAD	22-Jan-2025	01
CAD	05-Feb-2025	02
CAD	11-Feb-2025	03
CAD	17-Feb-2025	04

Registered Professional Engineer (Electrical)
CERTIFICATE NO.
Signature with Seal
76473
GREGORY M. DILLETT II
Date Signed 5/7/25
ARIZONA, U.S.A.

Project Name & Address

JACKSON RESIDENCE
4622 E FOOTHILL DR, PARADISE VALLEY, AZ 85253
UTILITY ACCOUNT #: 1391810000
AHJ: PARADISE VALLEY; UTILITY: APS

Service #
OUR69110

Sheet Name
1-LINE DIAGRAM

Sheet Size
ANSI B
11" X 17"

Sheet Number
E 1.2

PV MODULE RATING @ STC	
MANUFACTURER	QCELL Q.TRON BLK M-G2+ 430W
MAX. POWER-POINT CURRENT (IMP)	13.05 AMPS
MAX. POWER-POINT VOLTAGE (VMP)	32.94 VOLTS
OPEN-CIRCUIT VOLTAGE (VOC)	39.32 VOLTS
SHORT-CIRCUIT CURRENT (ISC)	13.74 AMPS
MAX. SERIES FUSE (OCPD)	25 AMPS
NOM. MAX. POWER AT STC (PMAX)	430 WATTS
MAX. SYSTEM VOLTAGE	1000V (IEC) / 1000V (UL)
VOC TEMPERATURE COEFFICIENT	-0.24 %/K

INVERTER SPECIFICATIONS	
MANUFACTURER	SOL-ARK 15K-2P-N
NOMINAL AC OUTPUT POWER @ 240V	ON GRID - 15000W, 62.5A OFF GRID - 12000W, 50A
NUMBER OF MPPT'S / STRINGS	3 / 6
MAX. DC PV INPUT POWER	19500W
PV MAX. DC INPUT VOLTAGE	500V
MPPT RANGE	125-425V

BATTERY SPECIFICATIONS	
MANUFACTURER	STORZ SP5.12-LFPV4
BATTERY CHEMISTRY	LITHIUM-IRON PHOSPHATE
ROUND TRIP EFFICIENCY DC-DC	98%
BATTERY VOLTAGE RANGE	44V-56V
MPPT RANGE	125-425V

Rooftop conductor ampacities designed in compliance with art. 690.8, Tables 310.15(B)(2)(a), 310.15(B)(3)(a), 310.15(B)(3)(c), 310.15(B)(16), Chapter 9 Table 4, 5, & 9. Location specific temperature obtained from ASHRAE 2014 data tables

RECORD LOW TEMP	-1°
AMBIENT TEMP (HIGH TEMP 2%)	43°
CONDUIT HEIGHT	7/8"
CONDUCTOR TEMPERATURE RATE ON / OFF ROOF	90°

THIS PANEL IS FED BY MULTIPLE SOURCES (UTILITY AND SOLAR)	
AC OUTPUT CURRENT ACCORDING TO ART. 690.8(B)(1)	562.50A
NOMINAL AC VOLTAGE	240V

PERCENT OF VALUES	NUMBER OF CURRENT CARRYING CONDUCTORS IN CONDUIT
.80	4-6
.70	7-9
.50	10-20

OCPD Calculations

Breakers sized according to continuous duty output current.
Inverter Output Current X (1.25[art. 690.8(A)])
System output current w/ continuous duty = 78.13A <= 90A (Inverter OCPD)

For Total inverters,
78.13A X 09 = 703.17A <= 800A (Main OCPD)

Conductor Calculations

Wire gauge calculated from code art. 310.16 with ambient temperature calculations from art. 310.15(B)(1).
For "On Roof" conductors we use the 90°C column ampacity, the relevant ambient temperature adjustment, and raceway fill adjustments from 310.16. Conduit shall be installed at least 1" above the roof deck.
For "Off Roof" conductors we use the 90°C column ampacity, or the 90°C column ampacity with the relevant ambient temperature and raceway fill adjustments, whichever is less.The rating of the conductor after adjustments MUST be greater than, or equal to, the continuous duty uprated output current.
Calculation Example - Wire Rating (90°C) x Ambient Temperature Adjustment x Conduit Fill Adjustment >= Continuous Duty Output Current
(Tag 2 On Roof):
10 gauge wire rated for 40 A, 40 A x 0.87 x 0.8 (6 Conductors) = 27.84A > 17.18A
(Tag 3 Off Roof):
1/0 gauge wire rated for 170A , 170A x 0.87 = 147.90A > 60A (Battery Output)
(Tag 4 Off Roof):
3/0 gauge wire rated for 225A , 225A x 0.87 = 195.75A > 60A (Battery Output)
(Tag 5 Off Roof):
3 gauge wire rated for 115A , 115A x 0.87 = 100.05A > 90A (Inverter OCPD)
(Tag 6, 6T Off Roof):
2 Set of 600 kcmil wire rated for 475A , 2 x 475A x 0.87 = 826.5A > 800A (System OCPD)
(Tag 7 Off Roof):
3 gauge wire rated for 110A , 110A x 0.87 = 95.7A > 90A (Generator Feeder)

ELECTRICAL NOTES

- Designed according to and all code citations are relevant to the 2014 National Electrical Code.
- Tag 2-Use 87% temperature derate for conditions of use (direct sunlight on roof)
- Tag 3 - Use 87% temperature derate for conditions of use (adjusted ambient)
- Bottom of conduit to be installed min. 7/8" above roof surface.
- Photovoltaic utility meter and photovoltaic utility disconnect switch to be installed and labeled as required by ESS PAGE 11-43
- System grounding & bonding designed in compliance with 690.47(C)3 and 250.64(E)
- Equipment shall be listed, tested, and marked to withstand the available short circuit current

OUR WORLD ENERGY
OUR WORLD ENERGY
8716 W Ludlow Dr Suite 6,
Peoria, AZ 85381, USA
PHONE: - 623-850-5700

REVISIONS

Description	Date	Rev
CAD	08-Jan-2025	00
CAD	22-Jan-2025	01
CAD	05-Feb-2025	02
CAD	11-Feb-2025	03
CAD	12-Feb-2025	04
CAD	17-Apr-2025	05

CERTIFICATE
Signature with Seal
Registered Professional Engineer (Civil)
76473
GREGORY M.
DILLETT II
Date Signed 5/7/25
ARIZONA, U.S.A.

Project Name & Address

JACKSON RESIDENCE
4622 E FOOTHILL DR, PARADISE VALLEY,
AZ 85253
UTILITY ACCOUNT #: 1391810000
AHJ: PARADISE VALLEY; UTILITY: APS

Service #
OUR69110

Sheet Name
WIRE CALCS

Sheet Size
ANSI B
11" X 17"

Sheet Number
E 1.3

KEY NOTES

1. LABEL "WARNING POWER SOURCE OUTPUT CONNECTION. DO NOT RELOCATE THIS OVERCURRENT DEVICE." AND LOCATE BREAKER AT OPPOSITE END OF BUS FROM MAIN BREAKER LOCATION PER 2014 NEC 705.12(B)(3).
2. BI-DIRECTIONAL UTILITY METER TO BE INSTALLED BY UTILITY COMPANY.
3. LABEL BREAKER "PHOTOVOLTAIC ELECTRIC POWER SOURCE" PER NEC 705.12(B)(2)(3)(b) AND "BREAKERS ARE BACKFED" PER NEC 705.12(B)(2)(3)(C). LABEL WITH THE RATED AC OUTPUT CURRENT AND THE NOMINAL OPERATING VOLTAGE PER NEC 690.54.
4. LABEL "UTILITY DISCONNECT". SWITCH COVER TO BE LOCKED PER THE NEC 690.13(B) AT ALL TIMES BY UTILITY SWITCH TO BE VISIBLE OPEN AND ACCESSIBLE PER UTILITY REQUIREMENTS AND CONFORM TO NEC 705.20.
5. LABEL "PHOTOVOLTAIC ARRAY DC DISCONNECT" PER NEC 690.13(B). LABEL WITH MAXIMUM DC VOLTAGE, OUTPUT CURRENT PER NEC 690.53. SWITCH COVER TO BE LOCKED PER NEC 690.12(A)
6. LABEL "WARNING; THIS SUB-PANEL FED FROM MULTI-POWER PRODUCTION SOURCES".
7. PROVIDE WARNING SIGN PER NEC 690.13(B) AND 706.15(C).READING"WARNING-ELECTRIC SHOCK HAZARD-TERMINALS ON THE LINE AND LOAD SIDE MAY BE ENERGIZED IN THE OPEN POSITION.
8. INVERTER TO BE LISTED TO UL 1741SA AND SB
9. METALLIC CONDUIT SHALL BE USED WITHING BUILDING AND LABELED PER THE 690.31(D)
10. GROUND FAULT PROTECTION PER NEC 690.41(B). PROVIDE IN DC/AC INVERTER
11. GEC TO BE INSTALLED AS REQUIRED PER MANUFACTURER INSTRUCTION AND NEC 690.47.
12. LABEL "MAIN BREAKER HAS BEEN DE-RATED PER NEC 705.12(B)(2)(3)(c)" & "MAX 175 AMPS".
13. BUILDING RAPID SHUTDOWN PER NEC 690.56(C); LABEL; "SOLAR PV SYSTEM IS EQUIPPED WITH RAPID SHUTDOWN. TURN RAPID SHUTDOWN SWITCH TO THE "OFF" POSITION TO SHUTDOWN PV SYSTEM AND REDUCE HAZARD IN THE ARRAY".
14. LABEL "RAPID SHUTDOWN SWITCH FOR SOLAR PER NEC 690.56(C)(2).
15. LABEL "CUSTOMER FUSED DISCONNECT"SWITCH COVER TO BE LOCKED AT ALL TIMES,AND COMPLY WITH NEC 705.20 PER NEC.
16. CUSTOMER WILL INSTALL RING-TYPE METER SOCKET WITH NON-DETENTED FORM 2S. APS WILL INSTALL THE PRODUCTION METER LABEL METER METER SOCKET"BI-DIRECTIONAL METER".
17. CUSTOMER WILL INSTALL RING-TYPE METER SOCKET WITH NON-DETENTED FORM 2S. APS WILL INSTALL THE PRODUCTION METER LABEL METER METER SOCKET "UNI-DIRECTIONAL METER".
18. LABEL "GENERATOR DISCONNECT" SWITCH COVER TO BE LOCKED PER NEC 690.13(B) AT ALL TIMES BY UTILITY SWITCH TO BE VISIBLE OPEN AND ACCESSIBLE PER UTILITY REQUIREMENTS AND CONFIRM TO NEC 705.20
19. LABEL CAUTION - MULTI SOURCE OF POWER" ON PLACARD/DIRECTORY PER NEC 705.10.
20. LABEL: "BI-DIRECTIONAL METER LINE SIDE DISCONNECT".SWITCH COVER TO BE LOCKED PER NEC 690.13(B) AT ALL TIMES BY THE UTILITY SWITCH TO BE VISIBLE OPEN AND ACCESSIBLE PER UTILITY REQUIREMENTS AND CONFORM TO NEC 705.20.
21. LABEL: "BI-DIRECTIONAL METER DER SIDE DISCONNECT".SWITCH COVER TO BE LOCKED PER NEC 690.13(B) AT ALL TIMES BY THE UTILITY SWITCH TO BE VISIBLE OPEN AND ACCESSIBLE PER UTILITY REQUIREMENTS AND CONFORM TO NEC 705.20.
22. LABEL: "SOLAR PV SYSTEM IS EQUIPPED WITH RAPID SHUTDOWN SWITCH, TURN RAPID SHUTDOWN SWITCH TO THE "OFF" POSITION TO SHUT SOWN PV SYSTEM AND REDUCE HAZARD IN ARRAY" AND SHALL CONFORM TO NEC 690.56..

GENERAL NOTES

A. EQUIPMENT SHALL BE INSTALLED IN ACCORDANCE WITH THE 2014 NEC AND ALL APPLICABLE REQUIREMENTS OF THE LOCAL AUTHORITY HAVING JURISDICTION.

B. DC ARRAY PANEL GROUND WIRES MUST BE CONTINUOUS AND INSTALLED TO ALLOW FOR PANEL REMOVAL WITHOUT DISRUPTING CONTINUITY. ALL MODULE GROUND CONNECTIONS SHALL BE MADE IN ACCORDANCE WITH NEC 690.43 AND 690.47.

C. FOLLOW MANUFACTURERS' SUGGESTED INSTALLATION PRACTICES AND WIRING SPECIFICATIONS FOR ALL EQUIPMENT.

D. ARRAY DC WIRES SHALL BE RATED AND LABELED "SUNLIGHT RESISTANT" WHERE EXPOSED TO AMBIENT CONDITIONS FOR ALL 300.6(B)(1).

E. DC EQUIPMENT SHOWN FOR ILLUSTRATION PURPOSES ONLY. ACTUAL DESIGN SHALL BE IN ACCORDANCE WITH THE NEC AND MANUFACTURER'S SPECIFICATIONS AND INSTALLATION SHALL BE IN ACCORDANCE WITH AHJ REQUIREMENTS.

F. PER 705.10 A PERMANENT PLAQUE OR DIRECTORY, DENOTING ALL ELECTRIC POWER SOURCES ON OR IN THE PREMISES, SHALL BE INSTALLED AT EACH SERVICE EQUIPMENT LOCATION AND AT LOCATIONS OF ALL ELECTRIC POWER PRODUCTION SOURCES CAPABLE OF BEING INTERCONNECTED.

G. EQUIPMENT SHALL BE TESTED, LISTED, AND MARKED TO WITHSTAND THE AVAILABLE SHORT CIRCUIT CURRENT.

H. DWELLING BATTERY STORAGE ENERGY TRESHOLDS PER NFPA 855(2020) SECTION 15.7.1. THE 2021 VERSION OF THE "INTERNATIONAL FIRE CODE" AND THE 2021 VERSION IF THE INTERNATIONAL RESIDENTIAL FIRE CODE FOR ONE AND TWO FAMILY DWELLINGS"
INDIVIDULS: 20KWH
AGGREGATE: 40KWH WITHIN CLOSET AND STORAGE OR UTILITY SPACES
80KWH IN ATTACHED OR DETACHED GARAGES AND DETACHED ACCESSORY STRUCTURES
80KWH ON EXTERIOR WALLS
80KWH IN OUTDOOR INSTALLATION

OUR WORLD ENERGY
OUR WORLD ENERGY
8716 W Ludlow Dr Suite 6,
Peoria, AZ 85381, USA
PHONE: - 623-850-5700

REVISIONS

Description	Date	Rev
CAD	08-Jan-2025	00
CAD	22-Jan-2025	01
CAD	05-Feb-2025	02
CAD	11-Feb-2025	03
CAD	12-Feb-2025	04
CAD	30-Apr-2025	05

Registered Professional Engineer (Electrical)
CERTIFICATE
Signature with Seal
76473
GREGORY M.
DILLETT II
Date Signed 5/7/25
ARIZONA, U.S.A.

Project Name & Address

JACKSON RESIDENCE
4622 E FOOTHILL DR, PARADISE VALLEY,
AZ 85253
UTILITY ACCOUNT #: 1391810000
AHJ: PARADISE VALLEY; UTILITY: APS

Service #
OUR69110

Sheet Name
KEY NOTES

Sheet Size
ANSI B
11" X 17"

Sheet Number
E 1.4

PHOTOVOLTAIC SYSTEM
AC COMBINER PANEL

⚠WARNING

THIS EQUIPMENT FED BY MULTIPLE SOURCES. TOTAL RATING OF ALL OVERCURRENT DEVICES, EXCLUDING MAIN SUPPLY OVERCURRENT DEVICE, SHALL NOT EXCEED AMPACITY OF BUSBAR.

AUTHORIZED PERSONNEL ONLY

DO NOT ADD LOADS TO THIS PANEL

TURN OFF PHOTOVOLTAIC DISCONNECT PRIOR TO WORKING INSIDE PANEL

L01GEN.02.PLA.WH-RD

*To be installed at:

- PV or ESS AC combiner panels

PHOTOVOLTAIC ELECTRIC POWER SOURCE

⚠WARNING

ELECTRIC SHOCK HAZARD

TERMINALS ON THE LINE AND LOAD SIDE MAY BE ENERGIZED IN THE OPEN POSITION

DUAL POWER SUPPLY

SOURCES: UTILITY GRID AND PV SOLAR ELECTRIC SYSTEM

TURN OFF PHOTOVOLTAIC DISCONNECT PRIOR TO WORKING INSIDE PANEL

RATED AC OUTPUT CURRENT 562.500 A

NOMINAL AC OPERATING VOLTAGE 240 V

L01GEN.01.PLA.WH-RD

*To be installed at:

- MSP(SES)
- PV AC disconnect switch
- Subpanel (if point of interconnection)

*Rated AC Output Current to be field engraved by installer.

WARNING: PHOTOVOLTAIC POWER SOURCE

L01GEN.10.LAB.WH-RD

*To be installed at:

- All conduit containing PV conductors

RAPID SHUTDOWN SWITCH FOR SOLAR PV SYSTEM

L01GEN.11.LAB.WH-RD

*To be installed at:

- PV AC disconnect switch

⚠WARNING

THIS EQUIPMENT FED BY MULTIPLE SOURCES. TOTAL RATING OF ALL OVERCURRENT DEVICES, EXCLUDING MAIN SUPPLY OVERCURRENT DEVICE, SHALL NOT EXCEED AMPACITY OF BUSBAR.

L01GEN.04.PLA.WH-RD

*To be installed:

- Adjacent to PV backfed breaker at point of interconnection

SOLAR PV SYSTEM EQUIPPED WITH RAPID SHUTDOWN

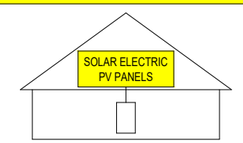

TURN RAPID SHUTDOWN SWITCH TO THE "OFF" POSITION TO SHUT DOWN PV SYSTEM AND REDUCE SHOCK HAZARD IN THE ARRAY

L01GEN.09.LAB.BK-YL

*To be installed at:

- MSP(SES)
- PV AC disconnect switch
- Subpanel (if point of interconnection)

*To be installed as label contents suggest

○ UTILITY DISCONNECT ○

L02APS.01.PLA.WH-BK

○ BI-DIRECTIONAL METER ○

L02APS.02.PLA.WH-BK

○ 1 OF 2 ○

L02APS.10.PLA.WH-BK

○ 2 OF 2 ○

L02APS.11.PLA.WH-BK

*If multiple instances of the equipment listed above exist, these labels shall be install directly underneath the above label.

⚠CAUTION

POWER TO THIS BUILDING IS ALSO SUPPLIED FROM THE FOLLOWING SOURCES WITH DISCONNECTS LOCATED AS SHOWN:

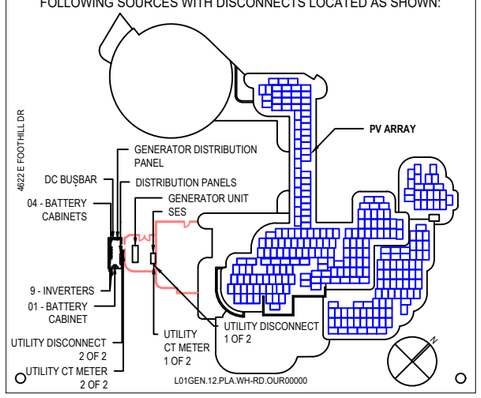

*To be installed:

- On every job
- At the main service panel
- and the PV disconnect at detached structures

INVERTER #1
OUTPUT CURRENT: 62.5 A
OUTPUT VOLTAGE: 240 V
L01GEN.13.PLA.WH-RD

INVERTER #2
OUTPUT CURRENT: 62.5 A
OUTPUT VOLTAGE: 240 V
L01GEN.13.PLA.WH-RD

INVERTER #3
OUTPUT CURRENT: 62.5 A
OUTPUT VOLTAGE: 240 V
L01GEN.13.PLA.WH-RD

INVERTER #4
OUTPUT CURRENT: 62.5 A
OUTPUT VOLTAGE: 240 V
L01GEN.13.PLA.WH-RD

INVERTER #5
OUTPUT CURRENT: 62.5 A
OUTPUT VOLTAGE: 240 V
L01GEN.13.PLA.WH-RD

INVERTER #6
OUTPUT CURRENT: 62.5 A
OUTPUT VOLTAGE: 240 V
L01GEN.13.PLA.WH-RD

INVERTER #7
OUTPUT CURRENT: 62.5 A
OUTPUT VOLTAGE: 240 V
L01GEN.13.PLA.WH-RD

INVERTER #8
OUTPUT CURRENT: 62.5 A
OUTPUT VOLTAGE: 240 V
L01GEN.13.PLA.WH-RD

INVERTER #9
OUTPUT CURRENT: 62.5 A
OUTPUT VOLTAGE: 240 V
L01GEN.13.PLA.WH-RD

OUR WORLD ENERGY
8716 W Ludlow Dr Suite 6,
Peoria, AZ 85381, USA
PHONE: - 623-850-5700

REVISIONS

Description	Date	Rev
CAD	08-Jan-2025	00
CAD	22-Jan-2025	01
CAD	05-Feb-2025	02
CAD	11-Feb-2025	03
CAD	12-Feb-2025	04
CAD	28-Feb-2025	05

Registered Professional Engineer (Electrical)
CERTIFICATE NO.
Signature with Seal
76473
GREGORY M. DILLETT II
Date Signed 5/7/25
ARIZONA, U.S.A.

Project Name & Address

JACKSON RESIDENCE
4622 E FOOTHILL DR, PARADISE VALLEY, AZ 85253
UTILITY ACCOUNT #: 1391810000
AHJ: PARADISE VALLEY; UTILITY: APS

Service #
OUR69110

Sheet Name
WARNING LABELS

Sheet Size
ANSI B
11" X 17"

Sheet Number
E 1.5

APS Interconnection & Incentive Equipment Labels - ANSI

ALL Labels to be made of UV resistant material and shall be permanently attached. Labels associated to an APS meter or disconnect shall be attached with rivets. All other labels may use the 3M 4930 VHB two-sided adhesive tape. These labels shall be in accordance with ANSI Z535.1-2006(R2011) & ANSI Z535.4-2011 and the latest APS Interconnection Requirements for Distributed Generation, Section 8.6. (Colors shown are per ANSI standards, not required by APS or NEC.) Text font shall be SansSerif, size shown shall be 1/4 inch unless otherwise noted.

Label No.	Label Location	Text	Reference	Approximate Sizes
(1)	Dedicated kWh meter *(Black with White Lettering)*	XXX METER	Replace "XXX" with "UNI-DIRECTIONAL", "BI-DIRECTIONAL", etc. as applicable. Add "1", "2", etc. as applicable for multiple meters.	1 x 3-1/2 inches text 1/4 inch
(2)	Utility Disconnect *(Black with White Lettering)*	UTILITY DISCONNECT	Add "1 OF 2", "2 OF 2", etc. as applicable	1 x 3-1/2 inches text 1/4 inch
(3)	Dedicated kWh meter *(Black with White Lettering)*	PHOTOVOLTAIC SYSTEM METER (UTILITY SIDE VOLTAGE ON TOP LUGS)	For APS SCP residential self contained only	1 x 3-1/2 inches text 1/4 inch
(4)		*Replaced with Label No. 28*		
(5)	Leasing Company kWh meter *(Black with White Lettering)*	LEASING COMPANY PV PRODUCTION METER		1 x 3-1/2 inches text 1/4 inch
(6)		*Replaced with Label No. 1*		
(7)		*Replaced with Label No. 1*		
(8)		*Replaced with Label No. 1*		
(9)	3rd Party Battery System meter *(Black with White Lettering)*	3RD PARTY OWNED BATTERY SYSTEM PRODUCTION METER		1 x 3-1/2 inches text 1/4 inch
(10)	Dedicated kWh meter PERMANENT PLAQUE OR DIRECTORY *(Black with White Lettering)*	~~[illegible]~~	No longer applicable. Disconnects must be adjacent to meter.	1/2 x 1-3/4 inches text 1/8 (or 1/16) inch
(11)		*Replaced with Label No. 2*		
(12)		*Replaced with Label No. 2*		
(13)	Meter Disconnect *(Black with White Lettering)*	XXX METER YYY DISCONNECT	Replace "XXX" with "UNI-DIRECTIONAL", "BI-DIRECTIONAL", etc. and "YYY" with "LINE SIDE", "DER SIDE", etc. as applicable	1 x 3-1/2 inches text 1/4 inch
(14)	Dedicated kWh meter PERMANENT PLAQUE OR DIRECTORY *(Black with White Lettering)*	OPEN ALL ISOLATION DEVICES [DIRECTION/LOCATION] TO ISOLATE THIS METERING ENCLOSURE FROM ALL KNOWN SOURCES OF POWER. ENSURE ISOLATION DEVICES ARE LOCKED IN THE OPEN POSITION IN ACCORDANCE WITH OSHA LOCK OUT - TAG OUT REQUIREMENTS PRIOR TO PERFORMING ANY WORK WITHIN THIS METERING ENCLOSURE	Replace" [DIRECTION/LOCATION] with specifics to identify devices and location to isolate the meter from all potential sources, especially when not in the same workspace	Minimum 1-1/2 x 5 inches text 1/8 inch
	Dedicated kWh meter *(Yellow with black letting)*	CAUTION SUPPLY/LINE SIDE CONNECTION		1-1/2 x 3-1/2 inches text 1/4 inch

8/3/2022

APS Interconnection & Incentive Equipment Labels - ANSI

ALL Labels to be made of UV resistant material and shall be permanently attached. Labels associated to an APS meter or disconnect shall be attached with rivets. All other labels may use the 3M 4930 VHB two-sided adhesive tape. These labels shall be in accordance with ANSI Z535.1-2006(R2011) & ANSI Z535.4-2011 and the latest APS Interconnection Requirements for Distributed Generation, Section 8.6. (Colors shown are per ANSI standards, not required by APS or NEC.) Text font shall be SansSerif, size shown shall be 1/4 inch unless otherwise noted.

Label No.	Label Location	Text	Reference	Approximate Sizes
(17)	Under Bi-Directional ESS meter *(Yellow with black letting)*	CAUTION POSSIBLE BACKFEED ENERGY STORAGE SYSTEM LOAD SIDE BACKFEED		1-1/2 x 3-1/2 inches text 1/4 inch
	Utility Disconnect & Dedicated kWh meter *(Orange with Black Lettering)*	WARNING ELECTRIC SHOCK HAZARD DO NOT TOUCH TERMINALS TERMINALS ON BOTH LINE AND LOAD SIDES MAY BE ENERGIZED IN THE OPEN POSITION	2011 & 2014 NEC 690.17(E) 2017 NEC 690.13(B), 690.15(D) 2020 NEC 690.13(B), 690.15(C), 706.15(C)	1-1/2 x 3-1/2 inches "Warning" Text 1/4 inch text 3/16 inch
	Service Entrance / Production Meter or Utility Disconnect when not adjacent *(Orange with Black Lettering)*	WARNING OTHER POWER SOURCE CONNECTED IS A DER SYSTEM. UTILITY DISCONNECT SWITCH FOR THIS SOURCE IS LOCATED APPROX 40 FEET FROM THIS LOCATION ON NORTH WEST SIDE OF DETACHED GARAGE.	AND WARNING SERVICE ENTRANCE IS LOCATED APPROXIMATELY 40 FEET NORTH AND 60 FEET WEST FROM THIS LOCATION ON SOUTH SIDE OF HOUSE	1-1/2 x 5 inches "Warning" Text 1/4 inch text 1/8 inch
	Combiner box/panel *(Blue with White Lettering)*	NOTICE DEDICATED DER SYSTEM COMBINER PANEL DO NOT ADD LOADS TO THIS PANEL		1-1/2 x 3-1/2 inches text 1/4 inch
	Supply Side Tap / Load Panel *(Orange with Black Lettering)*	WARNING A GENERATION SOURCE IS CONNECTED TO THE SUPPLY (UTILITY) SIDE OF THE SERVICE DISCONNECTING MEANS. FOLLOW PROPER LOCK-OUT/TAG-OUT PROCEDURES TO ENSURE THE DER UTILITY DISCONNECT IS OPENED PRIOR TO PERFORMING WORK ON THIS DEVICE		1-1/2 x 5 inches "Warning" Text 1/4 inch text 1/8 inch
	Service Entrance and Tap Box / Multiple Sources *(Orange with Black Lettering)*	WARNING MULTI POWER PRODUCTION SOURCES INTERCONNECTED TO THIS ELECTRICAL DEVICE		1-1/2 x 5 inches "Warning" Text 1/4 inch text 1/8 inch
(22)	Load Panel / Multiple Sources *(Orange with Black Lettering)*	WARNING THIS EQUIPMENT FED BY MULTIPLE SOURCES TOTAL RATING OF ALL OVERCURRENT DEVICES, EXCLUDING MAIN SUPPLY OVERCURRENT DEVICE, SHALL NOT EXCEED AMPACITY OF BUSBAR	2017 NEC 705.12(B)(2)(3)(c) 2020 NEC 705.12(B)(3)(3)	1-1/2 x 5 inches "Warning" Text 1/4 inch text 1/8 inch
(23)	Panelboard *(Red with White Lettering)*	CAUTION DUAL POWER SOURCES SECOND SOURCE IS PHOTOVOLTAIC SYSTEM	2011 NEC 705.12(D)(4) 2014 NEC 705.12(D)(3) 2017 NEC 705.12(B)(3)	1-1/2 x 5 inches "CAUTION" Text 1/4 inch text 1/8 inch
(24)	Service Entrance / Center-Fed Panelboard *(Red with White Lettering)*	CAUTION DO NOT MOVE BREAKERS OR ADD NEW CIRCUITS WITHOUT ELECTRICAL ENGINEER APPROVAL	2014 NEC 705.12(D)(2)(3)(d)	1-1/2 x 5 inches "CAUTION" Text 1/4 inch text 1/8 inch

8/3/2022

APS Interconnection & Incentive Equipment Labels - ANSI

ALL Labels to be made of UV resistant material and shall be permanently attached. Labels associated to an APS meter or disconnect shall be attached with rivets. All other labels may use the 3M 4930 VHB two-sided adhesive tape. These labels shall be in accordance with ANSI Z535.1-2006(R2011) & ANSI Z535.4-2011 and the latest APS Interconnection Requirements for Distributed Generation, Section 8.6. (Colors shown are per ANSI standards, not required by APS or NEC.) Text font shall be SansSerif, size shown shall be 1/4 inch unless otherwise noted.

Label No.	Label Location	Text	Reference	Approximate Sizes
(25)	Backfed Breaker *(Black with White Lettering)*	PHOTOVOLTAIC POWER SOURCE BREAKERS ARE BACKFEEDING	2011 NEC 705.12(D)(5) 2014 NEC 705.12(D)(4) 2017 NEC 705.12(B)(4) 2020 NEC 705.12(C)	1/2 x 1-3/4 inches text 1/8 (or 1/16) inch
(26)	Main Bkr De-rate *(Black with White Lettering)*	BREAKER HAS BEEN DE-RATED PER NEC 705.12(D)(2)	NOTE: FOR 2017 NEC REPLACE CODE REFERENCE WITH 705.12(B)(2)	1/2 x 1-3/4 inches text 1/8 (or 1/16) inch
(27)	Amp Rating of Main if De-rated *(Black with White Lettering)*	MAX ____ AMPS	LABEL TO BE INSTALLED ADJACENT TO OR UNDERNEITH LABEL 26	1/2 x 1-3/4 inches text 1/8 (or 1/16) inch
(28)	Backfed Breaker *(Orange with Black Lettering)*	WARNING POWER SOURCE OUTPUT CONNECTION DO NOT RELOCATE THIS OVERCURRENT DEVICE	2011 NEC 705.12(D)(7) 2014 NEC 705.12(D)(2) 2017 NEC 705.12(B)(2)(3)(b) 2020 NEC 705.12(B)(3)(2)	1-1/2 x 3-1/2 inches text 1/4 inch
(29)	Dedicated 3Phase kWh meter *(Orange with Black Letting)*	WARNING VOLTAGE AT THIS METER IS DIFFERENT THAN VOLTAGE AT BILLING METER ____/____Vac 3 PH __W	Fill in V and # wire for 3-ph systems where voltage at production meter is different than service voltage	1-1/2 x 3-1/2 inches text 1/4 inch
(30)	Under Bi-Directional meter *(Yellow with Black Lettering)*	CAUTION POSSIBLE BACKFEED EQUIPMENT CONNECTED TO TWO OR MORE SOURCES OF POWER		Utility Installed Labels
(31)	Pole/Transformer Sign *(Aluminum holder - Black with Yellow Lettering)*	CO - GEN		
	LABELS BELOW ARE FOR EXAMPLE ONLY, AND NOT REQUIRED TO BE ENGRAVED			
(*)	AC Panel *(Black with White Lettering)*	PHOTOVOLTAIC ELECTRIC POWER SOURCE MAXIMUM AC CURRENT ___ A SYSTEM AC VOLTAGE ___ V	NEC 690.54	1-1/2 x 3-1/2 inches Text 3/16 inch
(*)	DC Disconnect *(Black with White Lettering)*	PHOTOVOLTAIC ARRAY DC DISCONNECT SWITCH PHOTOVOLTAIC POWER SOURCE VOC ___ VDC ISC ___ A VOP ___ VDC IOP ___ A	NEC 690.53	1-1/2 x 3-1/2 inches Text 3/16 inch

8/3/2022

OUR WORLD ENERGY
8716 W Ludlow Dr Suite 6,
Peoria, AZ 85381, USA
PHONE: - 623-850-5700

REVISIONS

Description	Date	Rev
CAD	08-Jan-2025	00
CAD	22-Jan-2025	01
CAD	05-Feb-2025	02
CAD	11-Feb-2025	03
CAD	12-Feb-2025	04
CAD	28-Apr-2025	05

Registered Professional Engineer (Electrical)
CERTIFICATE NO.
Signature with Seal
76473
GREGORY M. DILLETT II
Date Signed 5/7/25
ARIZONA, U.S.A.

Project Name & Address

JACKSON RESIDENCE
4622 E FOOTHILL DR, PARADISE VALLEY, AZ 85253
UTILITY ACCOUNT #: 1391810000
AHJ: PARADISE VALLEY; UTILITY: APS

Service #
OUR69110

Sheet Name
EQUIP TAG LIST

Sheet Size
ANSI B 11" X 17"

Sheet Number
E 1.6

OUR WORLD ENERGY

OUR WORLD ENERGY
8716 W Ludlow Dr Suite 6,
Peoria, AZ 85381, USA
PHONE: - 623-850-5700

REVISIONS

Description	Date	Rev
CAD	08-Jan-2025	00
CAD	22-Jan-2025	01
CAD	05-Feb-2025	02
CAD	11-Feb-2025	03
CAD	10-Mar-2025	04

Registered Professional Engineer (Electrical)
CERTIFICATE NO.
76473
GREGORY M. DILLETT II
Date Signed 5/7/25
ARIZONA, U.S.A.

Project Name & Address

JACKSON RESIDENCE
4622 E FOOTHILL DR, PARADISE VALLEY, AZ 85253
UTILITY ACCOUNT #: 1391810000
AHJ: PARADISE VALLEY; UTILITY: APS

Service #
OUR69110

Sheet Name
ELECTRICAL PHOTOS UTILITY METER & LOCATION

Sheet Size
ANSI B
11" X 17"

Sheet Number
E 1.7

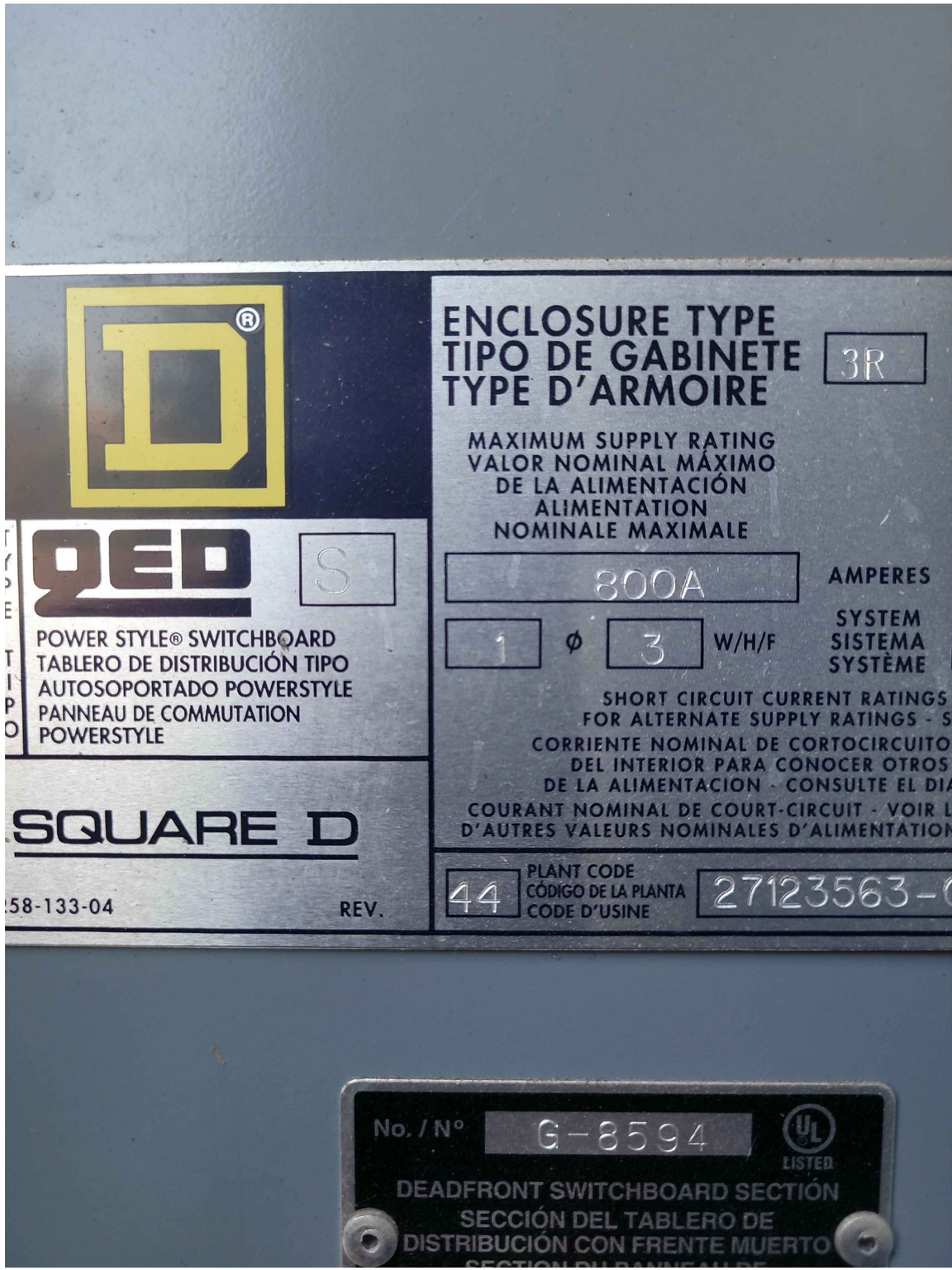

OUR WORLD ENERGY

OUR WORLD ENERGY
8716 W Ludlow Dr Suite 6,
Peoria, AZ 85381, USA
PHONE: - 623-850-5700

REVISIONS

Description	Date	Rev
CAD	08-Jan-2025	00
CAD	22-Jan-2025	01
CAD	05-Feb-2025	02
CAD	11-Feb-2025	03
CAD	17-Feb-2025	04

Registered Professional Engineer (Electrical)
CERTIFICATE NO.
Signature with Seal
76473
GREGORY M.
DILLETT II
5/7/25
Date Signed
ARIZONA, U.S.A.

Project Name & Address

JACKSON RESIDENCE
4622 E FOOTHILL DR, PARADISE VALLEY,
AZ 85253
UTILITY ACCOUNT #: 1391810000
AHJ: PARADISE VALLEY; UTILITY: APS

Service #
OUR69110

Sheet Name
ELECTRICAL PHOTOS
EXISTING MSP

Sheet Size
ANSI B
11" X 17"

Sheet Number
E 1.8

Q.TRON BLK M-G2+ SERIES

415 - 440 Wp | 108 Cells
22.5 % Maximum Module Efficiency

MODEL Q.TRON BLK M-G2+

High performance Qcells N-type solar cells

Q.ANTUM NEO Technology with optimized module layout boosts module efficiency up to 22.5 %.

A reliable investment

Inclusive 25-year product warranty and 25-year linear performance warranty[1].

Enduring high performance

Long-term yield security with Anti LeTID Technology, Anti PID Technology[2], Hot-Spot Protect.

Extreme weather rating

High-tech aluminium alloy frame, certified for high snow (8100 Pa) and wind loads (3600 Pa).

Innovative all-weather technology

Optimal yields, whatever the weather with excellent low-light and temperature behaviour.

The most thorough testing programme in the industry

Qcells is the first solar module manufacturer to pass the most comprehensive quality programme in the industry: The new "Quality Controlled PV" of the independent certification institute TÜV Rheinland.

[1] See data sheet on rear for further information.
[2] APT test conditions according to IEC/TS 62804-1:2015, method A (−1500 V, 96 h)

The ideal solution for:

Rooftop arrays on residential buildings

Q.TRON BLK M-G2+ SERIES

Mechanical Specification

Format	67.8 in × 44.6 in × 1.18 in (including frame) (1722 mm × 1134 mm × 30 mm)
Weight	46.7 lbs (21.2 kg)
Front Cover	0.13 in (3.2 mm) thermally pre-stressed glass with anti-reflection technology
Back Cover	Composite film
Frame	Black anodised aluminium
Cell	6 × 18 monocrystalline Q.ANTUM NEO solar half cells
Junction box	2.09-3.98 in × 1.26-2.36 in × 0.59-0.71 in (53-101 mm × 32-60 mm × 15-18 mm), Protection class IP67, with bypass diodes
Cable	4 mm² Solar cable; (+) ≥68.9 in (1750mm), (−) ≥68.9 in (1750mm)
Connector	Stäubli MC4; IP68

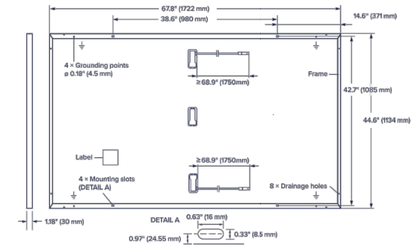

Electrical Characteristics

POWER CLASS			415	420	425	430	435	440
MINIMUM PERFORMANCE AT STANDARD TEST CONDITIONS, STC[1] (POWER TOLERANCE +5 W / −0 W)								
Minimum: Power at MPP[1]	P_{MPP}	[W]	415	420	425	430	435	440
Short Circuit Current[1]	I_{SC}	[A]	13.49	13.58	13.66	13.74	13.82	13.90
Open Circuit Voltage[1]	V_{OC}	[V]	38.47	38.75	39.03	39.32	39.60	39.88
Current at MPP	I_{MPP}	[A]	12.83	12.91	12.98	13.05	13.13	13.20
Voltage at MPP	V_{MPP}	[V]	32.34	32.54	32.74	32.94	33.14	33.33
Efficiency[1]	η	[%]	≥21.3	≥21.5	≥21.8	≥22.0	≥22.3	≥22.5
MINIMUM PERFORMANCE AT NORMAL OPERATING CONDITIONS, NMOT[2]								
Minimum: Power at MPP	P_{MPP}	[W]	313.7	317.5	321.2	325.0	328.8	332.6
Short Circuit Current	I_{SC}	[A]	10.87	10.94	11.00	11.07	11.14	11.20
Open Circuit Voltage	V_{OC}	[V]	36.50	36.77	37.04	37.31	37.58	37.84
Current at MPP	I_{MPP}	[A]	10.10	10.15	10.21	10.27	10.33	10.38
Voltage at MPP	V_{MPP}	[V]	31.07	31.26	31.46	31.65	31.84	32.03

[1]Measurement tolerances P_{MPP} ±3 %; I_{SC}; V_{OC} ±5 % at STC: 1000 W/m², 25±2 °C, AM 1.5 according to IEC 60904-3 • [2]800 W/m², NMOT, spectrum AM 1.5

Qcells PERFORMANCE WARRANTY

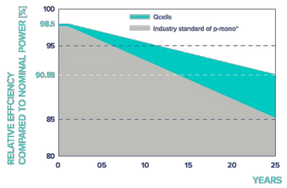

At least 98.5 % of nominal power during first year. Thereafter max. 0.33 % degradation per year. At least 95.53 % of nominal power up to 10 years. At least 90.58 % of nominal power up to 25 years.

All data within measurement tolerances. Full warranties in accordance with the warranty terms of the Qcells sales organisation of your respective country.

*Standard terms of guarantee for the 5 PV companies with the highest production capacity in 2021 (February 2021)

PERFORMANCE AT LOW IRRADIANCE

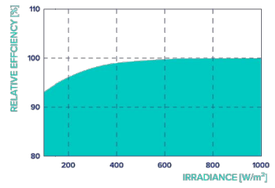

Typical module performance under low irradiance conditions in comparison to STC conditions (25 °C, 1000 W/m²).

TEMPERATURE COEFFICIENTS

Temperature Coefficient of I_{SC}	α	[%/K]	+0.04	Temperature Coefficient of V_{OC}	β	[%/K]	−0.24
Temperature Coefficient of P_{MPP}	γ	[%/K]	−0.30	Nominal Module Operating Temperature	NMOT	[°F]	109±5.4 (43±3 °C)

Properties for System Design

Maximum System Voltage	V_{SYS}	[V]	1000 (IEC)/1000 (UL)	PV module classification	Class II
Maximum Series Fuse Rating		[A DC]	25	Fire Rating based on ANSI / UL 61730	C / TYPE 2
Max. Design Load, Push / Pull[3]		[lbs / ft²]	113 (5400 Pa) / 50 (2400 Pa)	Permitted Module Temperature on Continuous Duty	−40 °F up to +185 °F (−40 °C up to +85 °C)
Max. Test Load, Push / Pull[3]		[lbs / ft²]	169 (8100 Pa) / 75 (3600 Pa)		

[3] See Installation Manual

Qualifications and Certificates

UL61730-1 & UL61730-2, CE-compliant, Quality Controlled PV - TÜV Rheinland, IEC 61215:2016, IEC 61730:2016, U.S. Patent No. 9,893,215 (solar cells).

*Contact your Qcells Sales Representative for details regarding the module's eligibility to be Buy American Act (BAA) compliant.

Qcells pursues minimizing paper output in consideration of the global environment.

Note: Installation instructions must be followed. Contact our technical service for further information on approved installation of this product.
Hanwha Q CELLS America Inc. 300 Spectrum Center Drive, Suite 500, Irvine, CA 92618, USA I TEL +1 949 748 59 96 I EMAIL na.support@qcells.com I WEB www.qcells.com/us

Specifications subject to technical changes © Qcells Q.TRON_BLK_M-G2+_series_415-440_2024-08_Rev04_NA

OUR WORLD ENERGY
8716 W Ludlow Dr Suite 6,
Peoria, AZ 85381, USA
PHONE: - 623-850-5700

REVISIONS

Description	Date	Rev
CAD	08-Jan-2025	00
CAD	22-Jan-2025	01
CAD	05-Feb-2025	02
CAD	11-Feb-2025	03
[illegible]	[illegible]	04

Registered Professional Engineer (Electrical) CERTIFICATE NO. 76473 GREGORY M. DILLETT II Date Signed 5/7/25 ARIZONA, U.S.A.

Signature with Seal

Project Name & Address

JACKSON RESIDENCE
4622 E FOOTHILL DR, PARADISE VALLEY, AZ 85253
UTILITY ACCOUNT #: 1391810000
AHJ: PARADISE VALLEY; UTILITY: APS

Service #
OUR69110

Sheet Name
MODULE SPEC SHEET

Sheet Size
ANSI B
11" X 17"

Sheet Number
D 1.1

DATASHEET

15K-2P-N

Residential Hybrid Inverter

Inverter Model:	Limitless 15K-LV
SKU:	15K-2P
Input Data (PV)	
Max. Allowed PV Power (STC)	19,500W
Rated MPPT Operating Voltage Range	175 - 425V
MPPT Voltage Range	150 - 500V
Startup Voltage	125V
Max. DC Input Voltage [1]	500V
Max. Operating Input Current per MPPT	26A
Max. Short Circuit Current per MPPT	44A
No. of MPP Trackers	3
No. of PV Strings per MPPT	2
Max. AC Coupled Input	19,200W
Output Data (AC)	
Nominal AC Voltage	120/240V, 120/208V, 220V
Grid Frequency	50 / 60Hz
Real Power, max continuous	15,000W
Max. Output Current	62.5A
Real Power, max continuous (batteries only, no PV)	12,000W (50A @ 240V)
Peak Apparent Power (10s, off-grid) Peak Apparent Power (100ms, off-grid)	24,000VA @ 240V 30,000VA @ 240V
Max Output Fault Current (5s)	94A with PV, 75A (batteries only)
Max Output Fault Current (100ms)	120A
Max. Grid Passthrough Current	200A
Power Factor Output Range	+/- 0.9 adjustable
Backup Transfer Time	5ms
CEC Efficiency	96.5%
Max Efficiency	97.5%
Design (DC to AC)	Transformerless DC
Stackable	Up to 12 in parallel
Battery Input Data (DC)	
Battery Technologies	Lithium / Lead Acid
Nominal DC Voltage	48V
Operating Voltage Range	43 - 63V
Capacity	50 – 9900Ah
Max. Battery Charge / Discharge Current	275A
Battery Disconnecting Means	200A/pole x 2
Charging Controller	3-Stage with Equalization
Grid to Battery Charging Efficiency	96.0%
External Battery Temperature Sensor (BTS)	Included
Automatic Generator Start (AGS)	2 Wire Start - Integrated
BMS Communication	CANBus & RS485 MODBUS
General Data	
Dimensions (H x W x D)	807 x 494 x 306 mm (31.8 x 19.4 x 12 in)
Weight	61.2 Kg / 135 lb.
Enclosure	IP65 / NEMA 3R
Ambient Temperature	-25~55°C, > 45°C Derating
Noise	< 30 dB @ 25°C (77°F)
Idle Consumption - No Load	90W
Communication and Monitoring	Wi-Fi & LAN Hardware Included
Standard Warranty	10 Years
Protection and Certifications	
Certifications and Listings	UL1741-2010/2018, IEEE1547a 2003/2014, FCC 15 Class B, UL1741SB, CA Rule 21, HECO Rule 14H
PV DC Disconnect Switch – NEC 240.15	Integrated
Ground Fault Detection – NEC 690.5	Integrated
PV Rapid Shutdown Control – NEC 690.12	Integrated
PV Arc Fault Detection – NEC 690.11	Integrated
PV Input Lightning Protection	Integrated
PV String Input Reverse Polarity Protection	Integrated
AC Output Breaker - 200A	Integrated
Surge Protection	DC Type II / AC Type II

1. See Installation Guide for more details on sizing array strings. The highest input voltage is based on the open-circuit voltage of the array at the minimum design temperature.

OUR WORLD ENERGY
8716 W Ludlow Dr Suite 6,
Peoria, AZ 85381, USA
PHONE: - 623-850-5700

REVISIONS

Description	Date	Rev
CAD	08-Jan-2025	00
CAD	22-Jan-2025	01
CAD	05-Feb-2025	02
CAD	11-Feb-2025	03
CAD	12-Feb-2025	04
CAD	07-May-2025	05

Signature with Seal

Registered Professional Engineer (Electrical)
CERTIFICATE NO.
76473
GREGORY M.
DILLETT II
5/7/25
Date Signed
ARIZONA, U.S.A.

Project Name & Address

JACKSON RESIDENCE
4622 E FOOTHILL DR, PARADISE VALLEY,
AZ 85253
UTILITY ACCOUNT #: 1391810000
AHJ: PARADISE VALLEY; UTILITY: APS

Service #
OUR69110

Sheet Name
INVERTER SPEC SHEET

Sheet Size
ANSI B
11" X 17"

Sheet Number
D 1.2

STORZ POWER
INTELLIGENCE IN ENERGY STORAGE

BATTERY SPECS

LiFePO4 Battery
Model #: SP5.12-LFPv4

Lithium-Iron Phosphate (LFP)
5.12 kWh Battery

Energy Capacity
5.12 kWh
100% depth of discharge
(at 1C Rate at 77°F)
98% round trip efficiency
100 (Ah)

Size & Weight:
17" x 17" x 8.75"
106 lbs.

Cycle Life
8,000+ @ 77°F
Storage temp <86°F
State of charge 20%-60%

Battery Chemistry
Lithium-Iron Phosphate (LFP)
Temperature range: 14°F to 113°F
(best between 77°F to 87°F)
Included
BMU/BMS/Modbus/Terminals
Metal casing

Battery Installation
Rack or floor mounted

Stacking
Up to 14 units in parallel

Voltage
51.2 V nominal voltage
44-56.8 V voltage range

Current
Continuous charge 100 A
Continuouse discharge 100 A
Peak 120 A, ≤ 0.3s

Communication Type
Double RS485

Cooling
Natural convection - no fan

Protection Function
Over-charge, over-discharge, over-current, short circuit, temperature

Compatibility
Most PV inverter manufacturers & grid-tied PV systems

Certifications
UL 1642, UN 38.3, ANSI/CAN/UL-1973, UL 9540-9540a ready

Warranty:
15 year performance warranty or 8,000 cycles @ 77°F
10 year product warranty

10 kWh 20 kWh 40 kWh

OUR WORLD ENERGY

OUR WORLD ENERGY
8716 W Ludlow Dr Suite 6,
Peoria, AZ 85381, USA
PHONE: - 623-850-5700

REVISIONS

Description	Date	Rev
CAD	08-Jan-2025	00
CAD	22-Jan-2025	01
CAD	05-Feb-2025	02
CAD	11-Feb-2025	03
CAD	12-Feb-2025	04
CAD	21-Apr-2025	05

Registered Professional Engineer (Electrical)
CERTIFICATE NO.
Signature with Seal
76473
GREGORY M.
DILLETT II
Date Signed 5/7/25
ARIZONA, U.S.A.

Project Name & Address

JACKSON RESIDENCE
4622 E FOOTHILL DR, PARADISE VALLEY,
AZ 85253
UTILITY ACCOUNT #: 1391810000
AHJ: PARADISE VALLEY; UTILITY: APS

Service #
OUR69110

Sheet Name
BATTERY SPEC SHEET

Sheet Size
ANSI B
11" X 17"

Sheet Number
D 1.3

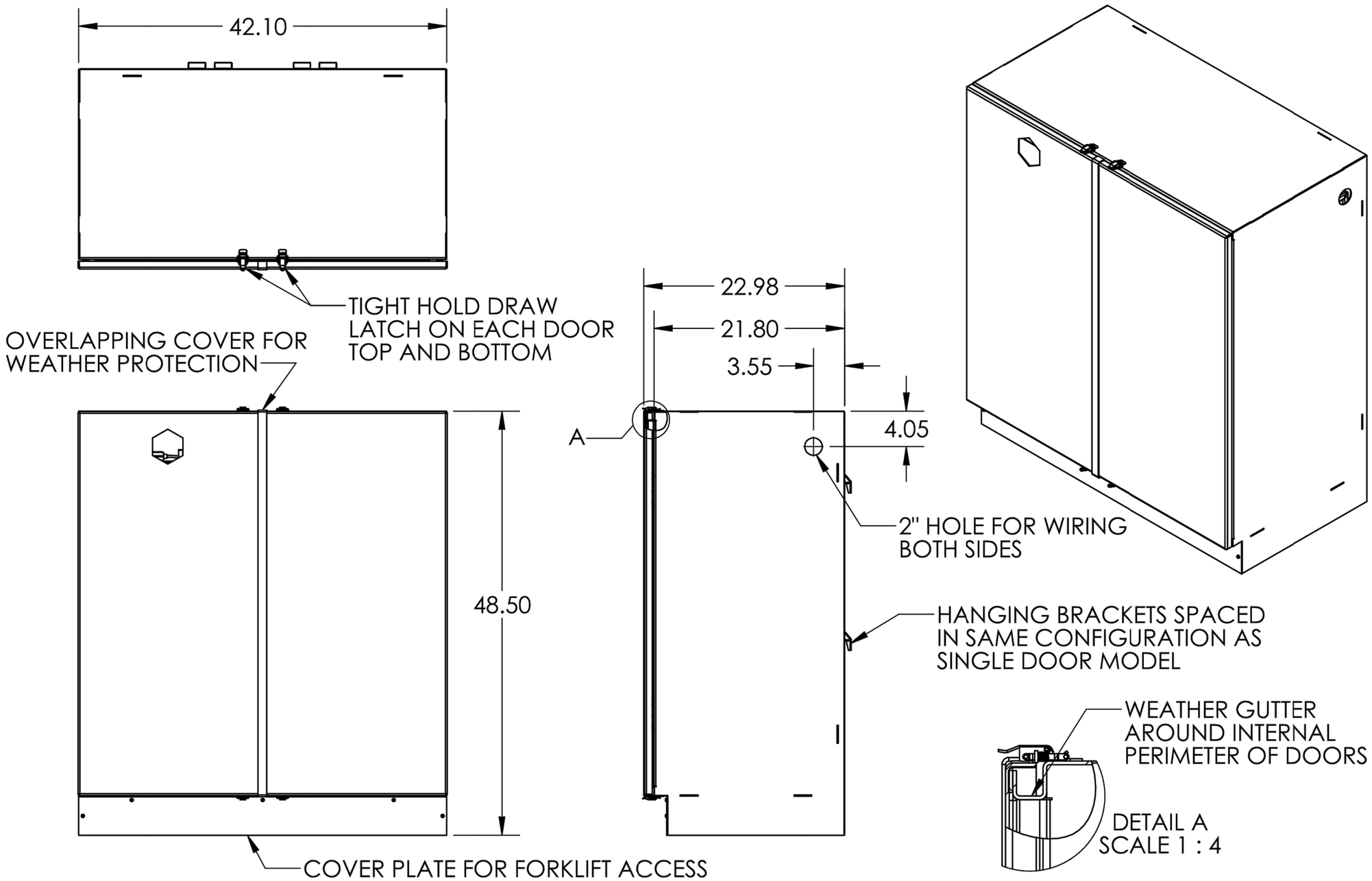

PROPRIETARY AND CONFIDENTIAL

THE INFORMATION CONTAINED IN THIS DRAWING IS THE SOLE PROPERTY OF INTERWEST MECHANICAL CONTRACTORS. ANY REPRODUCTION IN PART OR AS A WHOLE WITHOUT THE WRITTEN PERMISSION OF INTERWEST MECHANICAL CONTRACTORS IS PROHIBITED.

UNLESS OTHERWISE SPECIFIED:
DIMENSIONS ARE IN INCHES
TOLERANCES:
ANGULAR: ±0.5°
TWO PLACE DECIMAL ±.030
THREE PLACE DECIMAL ±.010

PROJECT: Storz Power Cabinet
MATERIAL
FINISH

	NAME	DATE
DRAWN	DB	2024-11-12

COMMENTS:

TITLE: Storz Double Door Panel Assembly - Design Review

SIZE	DWG. NO.	REV
A	STORZ-PANEL-40	0
SCALE: 1:24	WEIGHT:	SHEET 1 OF 2

OUR WORLD ENERGY
8716 W Ludlow Dr Suite 6,
Peoria, AZ 85381, USA
PHONE: - 623-850-5700

REVISIONS

Description	Date	Rev
CAD	08-Jan-2025	00
CAD	22-Jan-2025	01
CAD	05-Feb-2025	02
CAD	11-Feb-2025	03
CAD	04-Mar-2025	04

CERTIFICATE
Signature with Seal
Registered Professional Engineer (Electrical)
76473
GREGORY M. DILLETT II
Date Signed 5/7/25
ARIZONA, U.S.A.

Project Name & Address
JACKSON RESIDENCE
4622 E FOOTHILL DR, PARADISE VALLEY, AZ 85253
UTILITY ACCOUNT #: 1391810000
AHJ: PARADISE VALLEY; UTILITY: APS

Service #
OUR69110

Sheet Name
BATTERY CABINET SPEC SHEET

Sheet Size
ANSI B
11" X 17"

Sheet Number
D 1.4

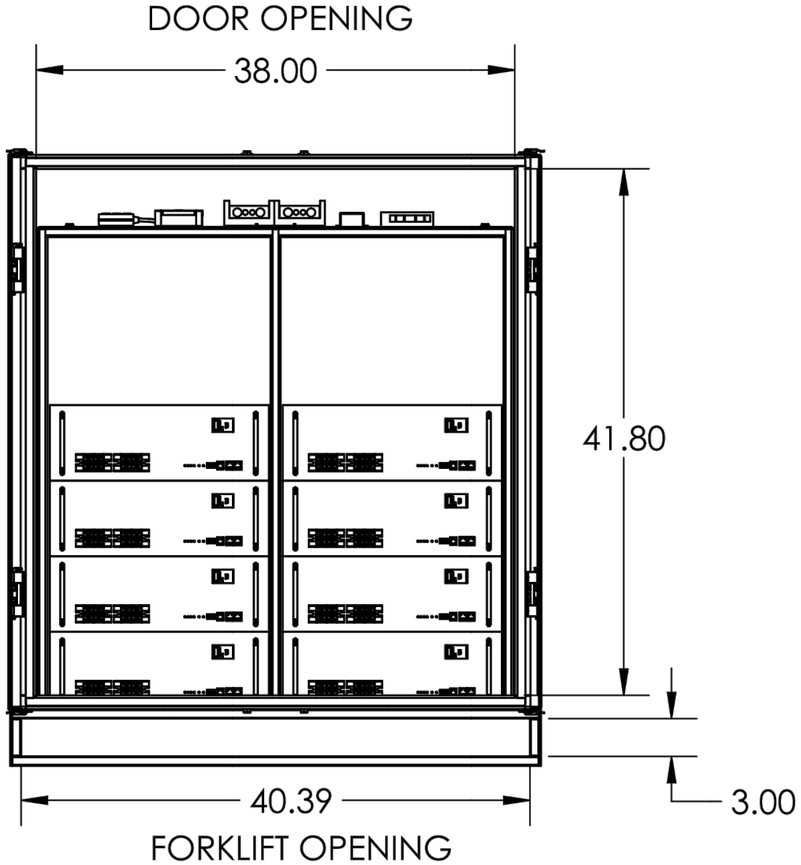

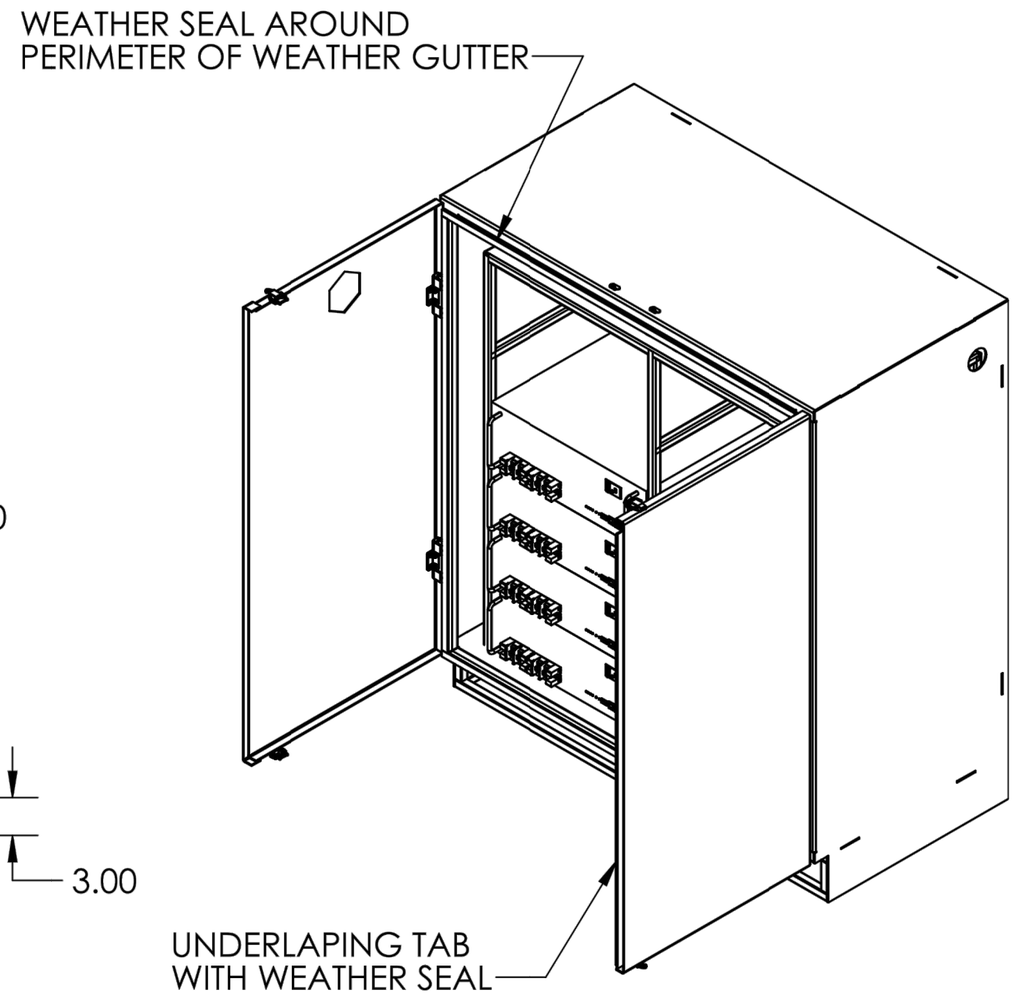

PROPRIETARY AND CONFIDENTIAL

THE INFORMATION CONTAINED IN THIS DRAWING IS THE SOLE PROPERTY OF INTERWEST MECHANICAL CONTRACTORS. ANY REPRODUCTION IN PART OR AS A WHOLE WITHOUT THE WRITTEN PERMISSION OF INTERWEST MECHANICAL CONTRACTORS IS PROHIBITED.

UNLESS OTHERWISE SPECIFIED:
DIMENSIONS ARE IN INCHES
TOLERANCES:

ANGULAR: ±0.5°
TWO PLACE DECIMAL ±.030
THREE PLACE DECIMAL ±.010

PROJECT: Storz Power Cabinet

MATERIAL

FINISH

	NAME	DATE
DRAWN	DB	2024-11-12

COMMENTS:

TITLE: Storz Double Door Panel Assembly - Design Review

SIZE	DWG. NO.	REV
A	STORZ-PANEL-40	0

SCALE: 1:16 | WEIGHT: | SHEET 2 OF 2

OUR WORLD ENERGY
8716 W Ludlow Dr Suite 6,
Peoria, AZ 85381, USA
PHONE: - 623-850-5700

REVISIONS

Description	Date	Rev
CAD	08-Jan-2025	00
CAD	22-Jan-2025	01
CAD	05-Feb-2025	02
CAD	11-Feb-2025	03
CAD	12-Feb-2025	04
CAD	16-Apr-2025	05

Signature with Seal

Registered Professional Engineer (Electrical)
CERTIFICATE NO.
76473
GREGORY M.
DILLETT II
Date Signed 5/7/25
ARIZONA, U.S.A.

Project Name & Address

JACKSON RESIDENCE
4622 E FOOTHILL DR, PARADISE VALLEY,
AZ 85253
UTILITY ACCOUNT #: 1391810000
AHJ: PARADISE VALLEY; UTILITY: APS

Service #
OUR69110

Sheet Name
BATTERY CABINET SPEC SHEET

Sheet Size
ANSI B
11" X 17"

Sheet Number
D 1.5

SnapNrack®

snapnrack.com

Ultra Rail Roof Mount System

The Ultimate Value in Rooftop Solar

- Industry leading Wire Management Solutions
- Mounts available for all roof types
- Single Tool Installation
- All SnapNrack Module Clamps & Accessories are compatible with both rail profiles

Start Installing Ultra Rail Today

SnapNrack Ultra Rail System

A sleek, straightforward rail solution for mounting solar modules on all roof types. Ultra Rail now features ***one*** rail profile, **UR-45**, a lightweight rail profile that's suited for all geographic regions, with varying span capabilities. UR-45 Rail maintains all the great features of SnapNrack rail like snap-in module clamps and an open rail channel for integrated wire management. The Ultra Rail portfolio features multiple roof attachment sealing technologies for all install preferences.

NEW! UltraFoot Roof Attachments (Coming Soon)

- Features SpeedSeal™+ Technology, a pre-installed butyl pad for easy peel & stick installation
- The ***only*** single lag roof attachment with butyl sealing available
- UltraFoot available in (3) configurations to accomodate rafter & deck mounting based on DeckAnchor™ or wood screw install preferences
- All UltraFoot designs feature ***new*** Flip Clamp Mount that centers load over fastener & creates an easier snap-in experience with UR-45 Rail

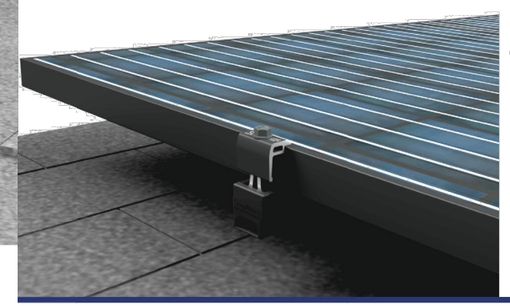

The Entire System is a Snap to Install

- Ultra Rail Mounts include snap-in brackets for attaching rail
- Ultra Rail Mid Clamps & End Clamps are one-size-fits-all universal clamping height
- Universal End Clamps & snap-in End Caps provide a clean look to the array edge

Unparalleled Wire Management

- Open rail channel provides room for running wires resulting in a long-lasting quality install
- Module clamps eliminate bolt interference in the rail channel creating more space for wire management
- Industry best wire management offering includes Junction Boxes, Universal Wire Clamps, MLPE Attachment Kits & Conduit Clamps
- System is fully bonded & listed to UL 2703 Standard

Quality. Innovative. Superior.

SnapNrack Solar Mounting Solutions are engineered to optimize material use and labor resources and improve overall installation quality and safety.

877-732-2860 **www.snapnrack.com** **contact@snapnrack.com**

© 2024 by SnapNrack Solar Mounting Solutions. All rights reserved

OUR WORLD ENERGY
8716 W Ludlow Dr Suite 6,
Peoria, AZ 85381, USA
PHONE: - 623-850-5700

REVISIONS

Description	Date	Rev
CAD	08-Jan-2025	00
CAD	22-Jan-2025	01
CAD	05-Feb-2025	02
CAD	11-Feb-2025	03
CAD	12-Feb-2025	04
CAD	30-Apr-2025	05

Signature with Seal

Project Name & Address

JACKSON RESIDENCE
4622 E FOOTHILL DR, PARADISE VALLEY,
AZ 85253
UTILITY ACCOUNT #: 1391810000
AHJ: PARADISE VALLEY; UTILITY: APS

Service #
OUR69110

Sheet Name
RAIL
SPEC SHEET

Sheet Size
ANSI B
11" X 17"

Sheet Number
D 1.6

SnapNrack®

Ultra Rail

OmniBase Tilt & Flush Mounts

Versatility for any application

- Single design to accommodate a wide variety of roof types
- Fewer parts required for maximum adjustability
- Alignment marks easily facilitate locating layout points
- Universal tool installation using a standard 1/2" socket

Start Installing the OmniBase Today!

SnapNrack Ultra Rail OmniBase Solutions

provide the ultimate flexibility in roof type, structural member and mounting configurations with a single base. Standoff attachments are engineered to ensure maximum adjustability for a clean, level installation on the most irregular roof surfaces.

Universal OmniBase

- Works with a single lag for traditional rafter mount installations
- Accommodates 2 or 4 lags for flat rafters TJI joists or metal framing.
- Can be used with 6 screws for rafter-less mounting
- Sealant Pockets allow for extra sealant around fastener
- Compatible with off the shelf flashings and e-curbs
- Anti-rotation features aid in installation

1" Post

- 5.5", 7" and 8.5" lengths available for flush mount configurations
- 5.5", 10", 14" and 23" lengths available for tilt systems accommodating both portrait & landscape orientations
- Standoff easily threads into base for attachment to any roof type

Leveling Clamp

- Clamps mount directly to SnapNrack Ultra Rail without the need for separate L Feet and mounting hardware
- Unique design offers ultimate adjustability to ensure clean, level arrays on uneven roofs
- Ships fully assembled with post and maintains the same 1/2" socket attachment throughout the system

Tilt Mount Assembly

Flush Mount Assembly

Quality. Performance. Innovation.

SnapNrack solutions are focused on simplifying the installation experience through intuitive products and the best wire management in the industry.

SnapNrack®

© 2021 by SnapNrack® Solar Mounting Solutions. All rights reserved

OUR WORLD ENERGY
OUR WORLD ENERGY
8716 W Ludlow Dr Suite 6,
Peoria, AZ 85381, USA
PHONE: - 623-850-5700

REVISIONS

Description	Date	Rev
CAD	08-Jan-2025	00
CAD	22-Jan-2025	01
CAD	05-Feb-2025	02
CAD	11-Feb-2025	03
CAD	12-Feb-2025	04
CAD	30-Apr-2025	05

Signature with Seal

Project Name & Address

JACKSON RESIDENCE
4622 E FOOTHILL DR, PARADISE VALLEY,
AZ 85253
UTILITY ACCOUNT #: 1391810000
AHJ: PARADISE VALLEY; UTILITY: APS

Service #
OUR69110

Sheet Name
MOUNTING SPEC SHEET

Sheet Size
ANSI B
11" X 17"

Sheet Number
D 1.7

E-CURB® SYSTEM

PENETRATION SEAL
WITH SILICONE SEALANT

Technical Data Sheet | **Polyether Technology** | **CSI Section No. 07 12 13**

CHEM LINK
Construction & Maintenance
Telephone: 800-826-1681
Fax: 269-679-4448
353 E. Lyons Street
Schoolcraft, MI 49087
www.chemlink.com

Last Revision: 07/16/20
Document No. DS1358S

Product Description

E-Curb penetration seals provide a high performance watertight solution designed to protect your largest investment with versatile, precast components and pourable sealants. The **E-Curb** System includes three components: 1) precast curbs, 2) DuraSil Silicone Adhesive/Sealant for bonding the curb to the roof's surface and to prime the penetration, and 3) a silicone self-leveling pourable sealant to fill the curbs, creating a monolithic, leak-proof seal. CHEM LINK's **E-Curb** System can usually be installed in under 15 minutes and never requires flashing or mechanical attachment.

E-Curbs are highly versatile for sealing penetrations on silicone roof coatings as well as around HVAC, mechanical, solar panel mounts, electrical, and any type of structural supports.

When properly installed, this system forms a durable, waterproof rubber seal around penetrations. An extended manufacturers warranty against leaks is activated with submittal of a completed warranty card.

Special Characteristics

- Rapid installation - "Slip-fit" light weight curb design significantly reduces labor.
- Excellent adhesion to most roofing materials.
- No flashing or mechanical attachment required.
- Service Temp -80°F to 400°F (-62°C to 204°C)
- For sloped roof applications, substitute **DuraSil®** non-slump adhesive/sealant for **DuraSil SL**.

Restrictions

- Silicone roof coatings vary in quality, please test and evaluate prior to installation.
- Please contact customer service for application guidelines with temperatures below 32°F (0°C).
- Do not install if rain is anticipated within 4 hours
- Do not prime bonding surfaces with asphalt primer.
- **E-Curb** kits are designed to contain enough **DuraSil SL** to fill each curb with displacement in consideration. Refer to our penetration calculator under Contractor Resources at chemlink.com to verify volumes.
- To provide an adequate rubber seal, maintain a 1" distance between penetrations and inside edge of the **E-Curb**.

E-Curb System Components

- **E-Curb** exterior rings, straights, and corners.
- **DuraSil** Silicone Adhesive/Sealant used for bonding the **E-Curb** components, sealing and priming the penetration.
- **DuraSil SL** pourable silicone sealer, used to form a durable, watertight seal around the roof penetration

E-Curb precast form components are composed of lightweight nylon resin. The **E-Curb** is 2-inches high and is available in a variety of shapes and sizes.
Standard sizes include bisected circular pieces with inside diameters of 3, 4, 5, 6 or 9 inches; corner pieces with a 2-inch radius; straight pieces in 3-inch or 8-inch lengths; and a 4.5" x 3.4" rectangle. The outer surface is impervious to ice, corrosion, UV (ultraviolet) light and ponding water.

DuraSil is a neutral cure RTV silicone, adhesive sealant, designed for higher temperature applications up to 400°F (204°C). Cartridges of **DuraSil** are supplied in each **E-Curb** kit.
Components are also sold separately.

DuraSil SL is a self-leveling neutral cure silicone sealant designed for use in pitch pans and warranted **E-Curb** penetration seals suitable for hot pipe applications up to 400°F (204°C). 2 liter pouches of **DuraSil SL** are supplied in each **E-Curb** kit.
Components are also sold separately.

Made in the USA - ISO 9001:2015 certified

American Architectural Manufacturers Association
NATIONAL ROOFING CONTRACTORS ASSOCIATION MEMBER

Step 1
Remove all previously applied caulk, mastic, cement, asphalt, and other contaminants from penetrations with a wire brush. Clean all smooth substrates with isopropyl or denatured alcohol. Seal the base of each penetration with **DuraSil**. Coat penetrations with **DuraSil** to 3" above the roof line.

Step 2
Apply a 1/4" bead of **DuraSil** to the entire bottom inside and ouside perimeter of the **E-Curb**. Apply 1 additional 1/4" bead of **DuraSil** down the center of each perimeter bead. Do not tool the beads flat. Place the **E-Curb** section on the roof surface to form a half circle around the penetration(s). Press down firmly until **DuraSil** extrudes from the outside edges.

Step 3
Apply **DuraSil** to the second section of **E-Curb** as described above. Place the second section of curb on the roof surface to form a circle with the first section. Press firmly in place until excess adhesive extrudes from the outside edges. Apply a bead of **DuraSil** around the outside base of the installed **E-Curb**, and tool to form a smooth fillet.

Step 4
Screw the provided nozzle onto the **DuraSil SL** pouch, cut tip and squeeze material into **E-Curb** to fill. When complete, remove nozzle, squeeze out excess air, and reseal with cap.

All properties described in this document are derived from testing conducted in laboratory conditions. Properties and performance will vary depending on environmental conditions and application technique. Test and evaluate to determine appropriate usage. Visit www.chemlink.com for the Safety Data Sheet, Technical Data Guides and full warranty for this product.

LIMITED WARRANTY: ***CHEM LINK*** warrants this product's performance, provided it is properly stored and applied within 1 year. If this ***CHEM LINK*** material is proved to be defective, return remaining product and purchase receipt for refund or replacement of product exclusive of labor or cost of labor. This is the sole and exclusive remedy for defects or failure of this product. User must read and follow the direction of the current Technical Data Guide and SDS prior to product use. User determines suitability of product for intended use and assumes all risks. Manufacturer shall not be liable for damages (including consequential or incidental damages) in excess of the purchase price, except where such exclusion or limitation is prohibited by state law. THIS WARRANTY IS IN LIEU OF ALL OTHER WARRANTIES, WRITTEN OR ORAL, STATUTORY, EXPRESS OR IMPLIED INCLUDING ANY WARRANTY OF MERCHANTABILITY OR FITNESS FOR A PARTICULAR PURPOSE; except for the above express warranty given by manufacturer, the product is sold with all faults. ***CHEM LINK*** SHALL NOT BE RESPONSIBLE FOR THE USE OF THIS PRODUCT IN A MANNER TO INFRINGE ON ANY PATENT OR ANY OTHER INTELLECTUAL PROPERTY RIGHTS HELD BY OTHERS. This warranty gives you specific legal rights, and you may also have other rights in the U.S. which vary from state to state. For warranty claim information, call 800-826-1681.

OUR WORLD ENERGY
8716 W Ludlow Dr Suite 6,
Peoria, AZ 85381, USA,
PHONE: - 623-850-5700

REVISIONS

Description	Date	Rev
CAD	08-Jan-2025	00
CAD	22-Jan-2025	01
CAD	05-Feb-2025	02
CAD	11-Feb-2025	03
CAD	12-Feb-2025	04
CAD	30-Apr-2025	05

Signature with Seal

Project Name & Address

JACKSON RESIDENCE
4622 E FOOTHILL DR, PARADISE VALLEY,
AZ 85253
UTILITY ACCOUNT #: 1391810000
AHJ: PARADISE VALLEY; UTILITY: APS

Service #
OUR69110

Sheet Name
MOUNTING SPEC SHEET

Sheet Size
ANSI B
11" X 17"

Sheet Number
D 1.8

PARAPET WALL #1 (PARAPET HEIGHT: 3'-9")

PARAPET WALL #2 (PARAPET HEIGHT: 3'-9")

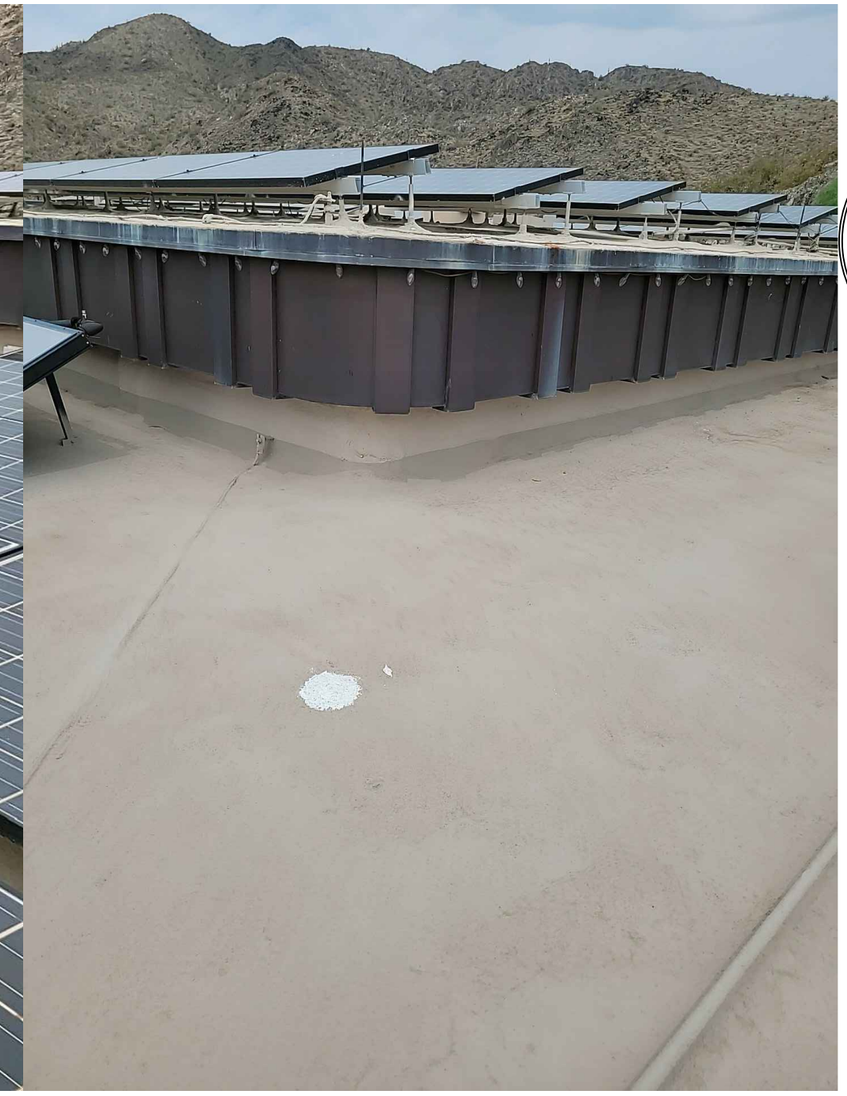

01

OUR WORLD ENERGY

OUR WORLD ENERGY
8716 W Ludlow Dr Suite 6,
Peoria, AZ 85381, USA
PHONE: - 623-850-5700

REVISIONS

Description	Date	Rev
CAD	08-Jan-2025	00
CAD	22-Jan-2025	01
CAD	05-Feb-2025	02
CAD	11-Feb-2025	03
CAD	14-Feb-2025	04

Registered Professional Engineer (Electrical)
CERTIFICATE NO.
76473
GREGORY M.
DILLETT II
5/7/25
Date Signed
ARIZONA, U.S.A.
(Signature with Seal)

Project Name & Address

JACKSON RESIDENCE
4622 E FOOTHILL DR, PARADISE VALLEY,
AZ 85253
UTILITY ACCOUNT #: 1391810000
AHJ: PARADISE VALLEY; UTILITY: APS

Service #

OUR69110

Sheet Name

PARAPET WALL IMAGES

Sheet Size

ANSI B
11" X 17"

Sheet Number

D 1.9

PARAPET WALL #3 (PARAPET HEIGHT (EST.): 6")

PARAPET WALL #4 (PARAPET HEIGHT (EST.): 6")

01

OUR WORLD ENERGY

OUR WORLD ENERGY
8716 W Ludlow Dr Suite 6,
Peoria, AZ 85381, USA,
PHONE: - 623-850-5700

REVISIONS

Description	Date	Rev
CAD	08-Jan-2025	00
CAD	22-Jan-2025	01
CAD	05-Feb-2025	02
CAD	11-Feb-2025	03
CAD	04-Mar-2025	04
CAD	07-Mar-2025	05

CERTIFICATE
Signature with Seal

Registered Professional Engineer (Electrical)
76473
GREGORY M.
DILLETT II
5/7/25
Date Signed
ARIZONA, U.S.A.

Project Name & Address

JACKSON RESIDENCE
4622 E FOOTHILL DR, PARADISE VALLEY,
AZ 85253
UTILITY ACCOUNT #: 1391810000
AHJ: PARADISE VALLEY; UTILITY: APS

Service #
OUR69110

Sheet Name
PARAPET WALL IMAGES

Sheet Size
ANSI B
11" X 17"

Sheet Number
D 1.10

PARAPET WALL #5 (PARAPET HEIGHT (EST.): 6")

PARAPET WALL #6 (PARAPET HEIGHT (EST.): 6")

01

OUR WORLD ENERGY

OUR WORLD ENERGY
8716 W Ludlow Dr Suite 6,
Peoria, AZ 85381, USA
PHONE: - 623-850-5700

REVISIONS

Description	Date	Rev
CAD	08-Jan-2025	00
CAD	22-Jan-2025	01
CAD	05-Feb-2025	02
CAD	11-Feb-2025	03
CAD	14-Feb-2025	04
CAD	07-May-2025	05

Signature with Seal

CERTIFICATE OF AUTHORITY
Registered Professional Engineer (Electrical)
76473
GREGORY M. DILLETT II
Date Signed 5/7/25
ARIZONA, U.S.A.

Project Name & Address

JACKSON RESIDENCE
4622 E FOOTHILL DR, PARADISE VALLEY, AZ 85253
UTILITY ACCOUNT #: 1391810000
AHJ: PARADISE VALLEY; UTILITY: APS

Service #
OUR69110

Sheet Name
PARAPET WALL IMAGES

Sheet Size
ANSI B
11" X 17"

Sheet Number
D 1.11